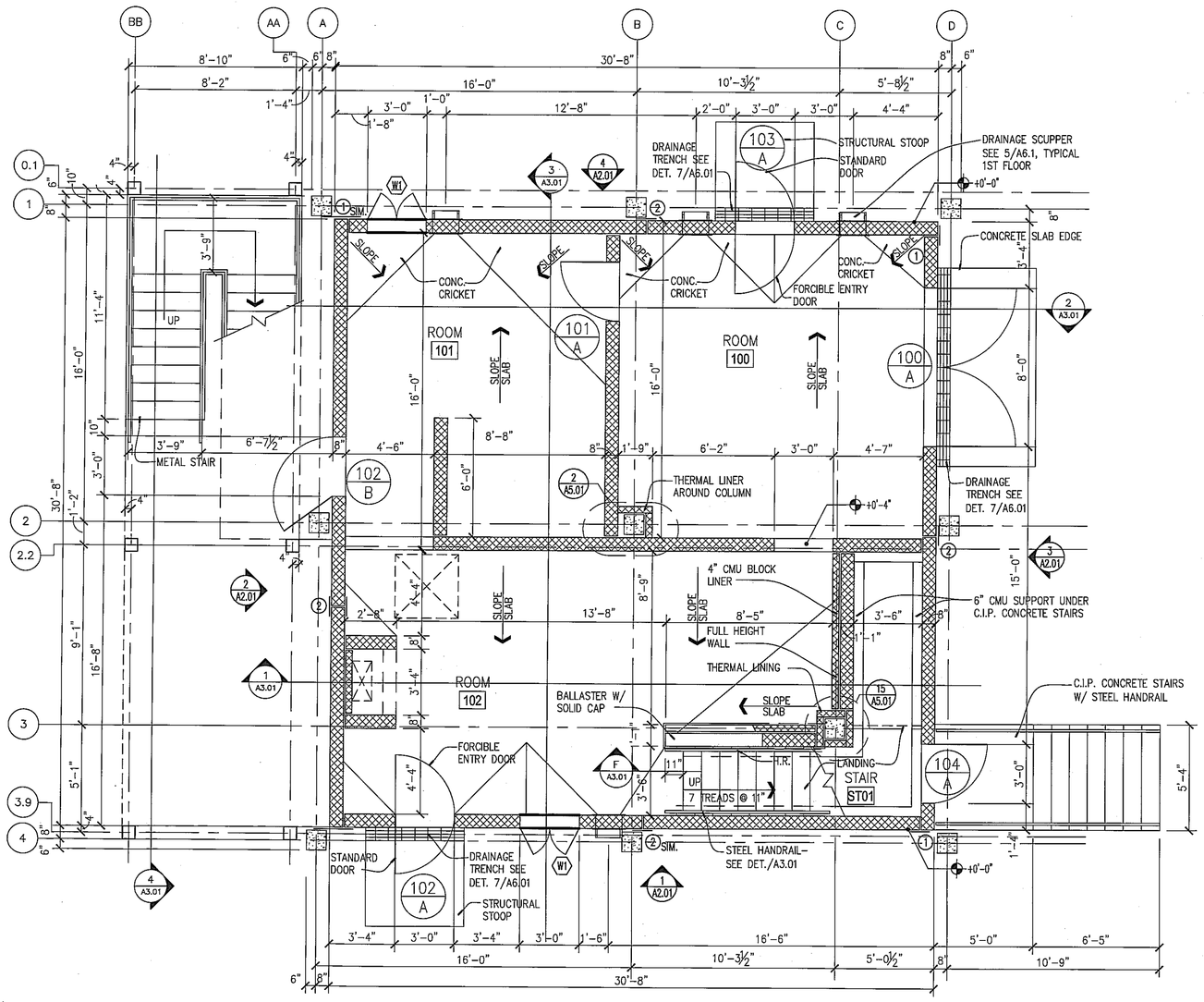


## FIRST FLOOR PLAN
1/4" = 1'-0"

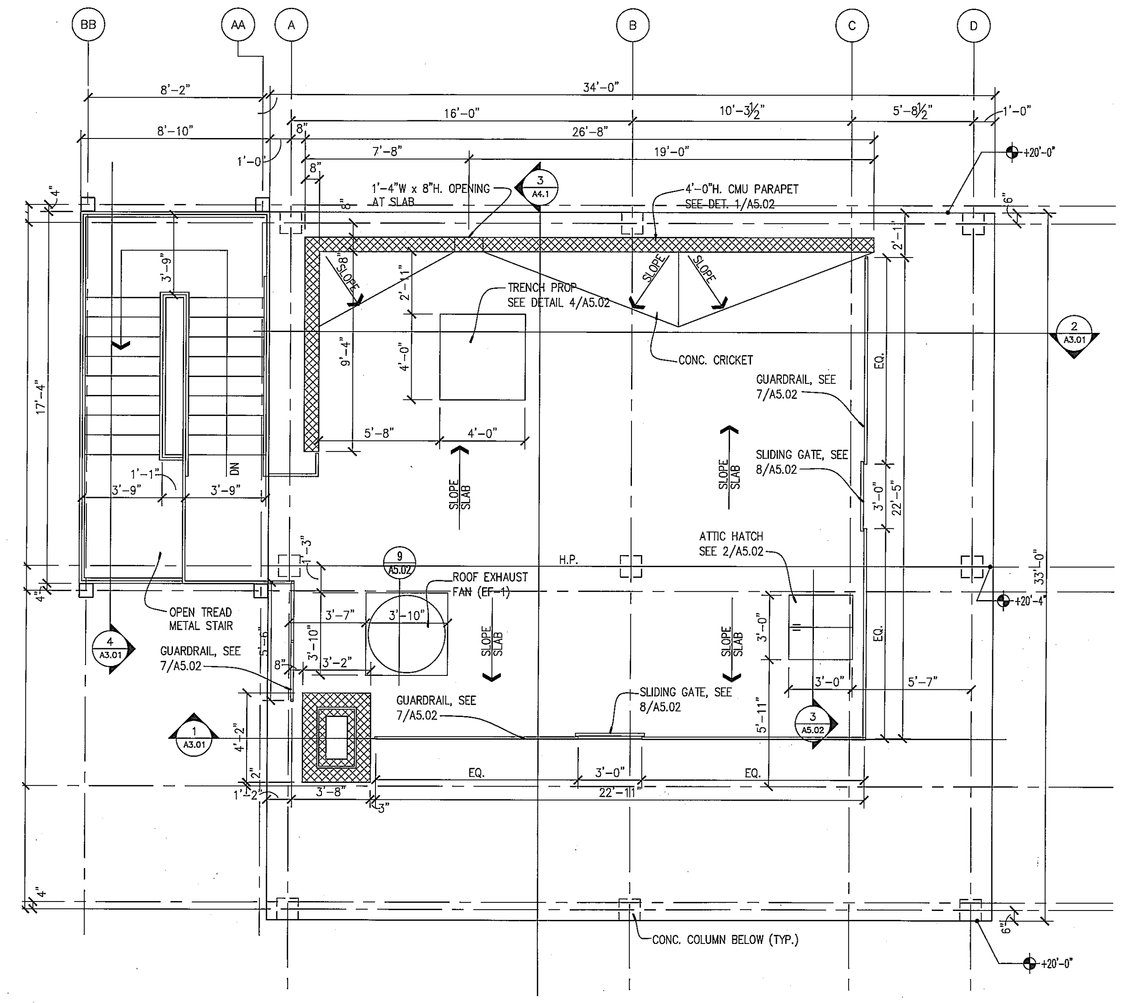


## ROOF PLAN
1/4" = 1'-0"

KEYNOTES:

1. 1/2" OPEN JOINT SEE DET. 3/A5.01
2. 1/2" OPEN JOINT SEE DET. 4/A5.01
3. 1/2" OPEN JOINT SEE DET. 5/A5.01
4. 1/2" OPEN JOINT SEE DET. 6/A5.01

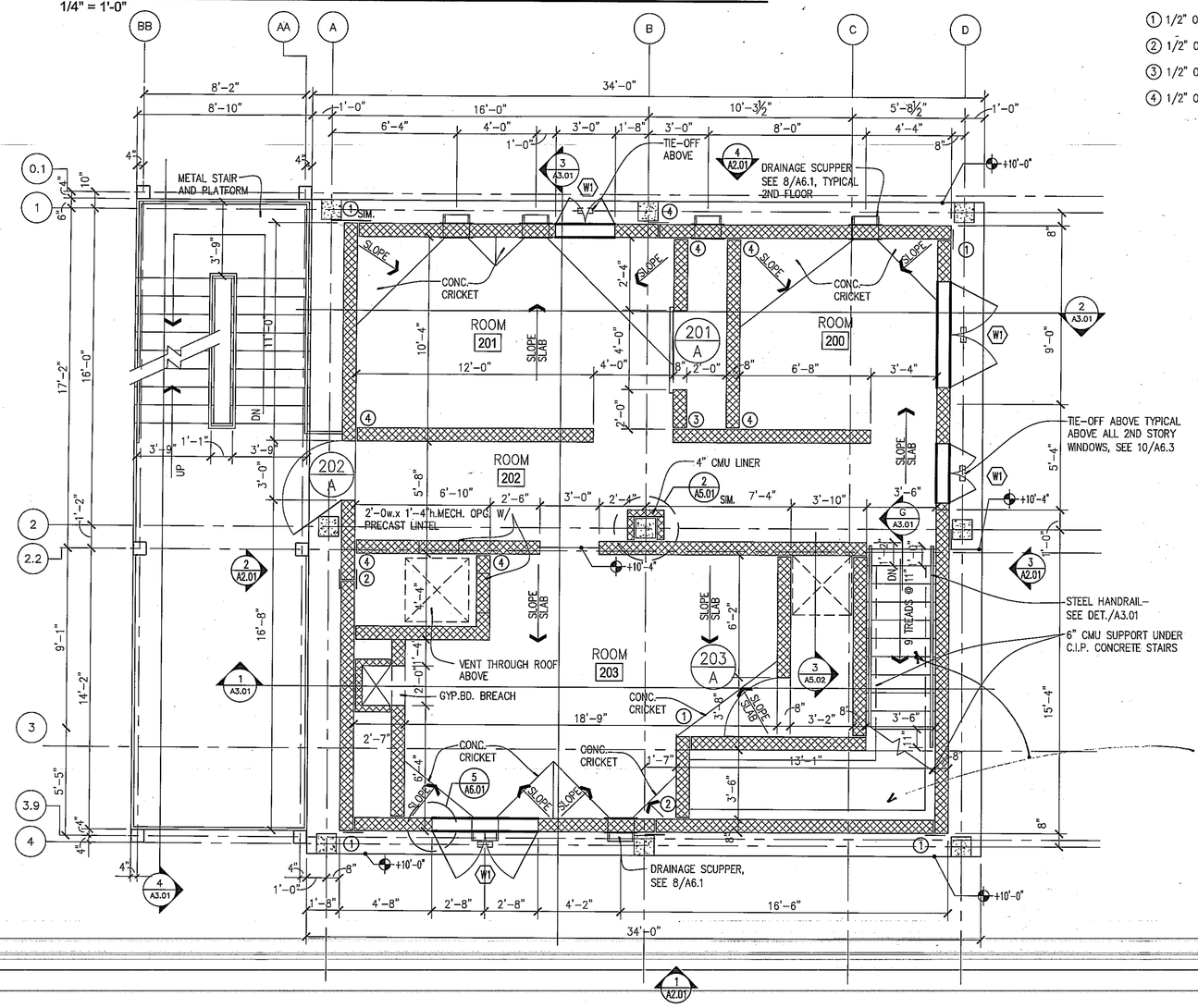


## SECOND FLOOR PLAN
1/4" = 1'-0"

## ROOM FINISH SCHEDULE

| ROOM NO | ROOM NAME | FLOOR | BASE | WALLS NORTH | CEILING MATL | CEILING HEIGHT | REMARKS |
|---|---|---|---|---|---|---|---|
| ST01 | STAIR | CONCRETE | --- | CONCRETE BLOCK | THERMAL LINING | 8'-9" | --- |
| 100 | ROOM | BRICK PAVERS | --- | CONCRETE BLOCK | THERMAL LINING | 8'-9" | --- |
| 101 | ROOM | BRICK PAVERS | --- | CONCRETE BLOCK | THERMAL LINING | 8'-9" | --- |
| 102 | ROOM | BRICK PAVERS | --- | CONCRETE BLOCK | THERMAL LINING | 8'-9" | --- |
| 200 | ROOM | BRICK PAVERS | --- | CONCRETE BLOCK | THERMAL LINING | 8'-9" | --- |
| 201 | ROOM | BRICK PAVERS | --- | CONCRETE BLOCK | THERMAL LINING | 8'-9" | --- |
| 202 | ROOM | BRICK PAVERS | --- | CONCRETE BLOCK | THERMAL LINING | 8'-9" | --- |
| 203 | ROOM | BRICK PAVERS | --- | CONCRETE BLOCK | THERMAL LINING | 8'-9" | --- |

## DOOR AND FRAME SCHEDULE

| DOOR No | TYPE | SIZE WD | SIZE HT | SIZE THK | MATERIAL | GLAZING | FRAME TYPE | FRAME MATL | DETAIL HEAD | DETAIL JAMB | DETAIL SILL | FIRE RATING LABEL | HDWR SET | REMARKS |
|---|---|---|---|---|---|---|---|---|---|---|---|---|---|---|
| 100/A | D | PR 4'-0" | 6'-8" | 1/4" | ST | --- | --- | ST | 3/A6.01 | 9/A6.01 | 2/A7.2 | --- | FABRICATED | CENTER LATCH, SIMILAR TO 5/A7.2 |
| 101/A | A | 3'-0" | 6'-8" | 1/4" | ST | --- | --- | ST | 3/A6.01 | 1/A6.01 | --- | --- | FABRICATED | --- |
| 102/A | B&F | 3'-0" | 6'-8" | 1/4" | ST | --- | --- | ST | 3/A6.01 SIM | 10/A6.01 | 7/A6.01 | --- | FABRICATED | FORCIBLE ENTRANCE W/ STANDARD DOOR |
| 102/B | A | 3'-0" | 6'-8" | 1/4" | ST | --- | | ST | 3/A6.01 | 1/A6.01 | 2/A6.01 | --- | FABRICATED | --- |
| 103/A | B | 3'-0" | 6'-8" | 1/4" | ST | --- | | ST | 3/A6.01 SIM | 10/A6.01 | --- | --- | FABRICATED | FORCIBLE ENTRY W/ STANDARD DOOR |
| 104/A | A | 3'-0" | 6'-8" | 1/4" | ST | --- | --- | ST | 1/A6.01 | 2/A6.01 | 3/A6.01 | --- | FABRICATED | --- |
| 201/A | C | PR 2'-0" | 6'-8" | 1/4" | ST | --- | --- | ST | 9/A6.01 | --- | 9/A6.01 | --- | 9/A6.01 | PROVIDE A FRONT & BACK TRACK & DOOR |
| 202/A | A | 3'-0" | 6'-8" | 1/4" | ST | --- | --- | ST | 3/A6.01 | 1/A6.01 | --- | --- | FABRICATED | --- |
| 203/A | A | 3'-0" | 6'-8" | 1/4" | ST | --- | --- | ST | 3/A6.01 | 1: & 11/A6.01 | 2/A7.2 | --- | FABRICATED | --- |

GENERAL NOTES:

1. SEE SHEET A6.01 FOR DOOR TYPES AND DETAILS.


Kimball
L. Robert Kimball & Associates
Architects and Engineers, Inc.
615 West Highland Ave.
Ebensburg, PA 15931
phone (814) 472-7700
fax (814) 472-7712
email aebldgs@lrkimball.com
web site www.lrkimball.com


CONSULTANTS

PROFESSIONAL

PROJECT NAME:

# WESTMORELAND COUNTY COMMUNITY COLLEGE CLASS A BURN BUILDING

OWNER:

WESTMORELAND COUNTY COMMUNITY COLLEGE

YOUNGWOOD, PA 15697

KEYPLAN

| MARK | DATE | DESCRIPTION |
|---|---|---|
| | | |

ISSUE: 05 / 02 / 07
PROJECT NO: 07- 2200 - 0175
CAD DWG FILE: XXXXXXXX.dwg
DRAWN BY: AK/LE
CHECKED BY: DG

© L. Robert Kimball & Associates Architects and Engineers, Inc.

SHEET TITLE

FIRST FLOOR PLAN, SECOND FLOOR PLAN, ROOF PLAN AND SCHEDULES

A1.01

H:\PROJ\07-0175\AE\ARCH\2A01\FLOT\070175_A101.dwg
May 02, 2007 - 12:15pm

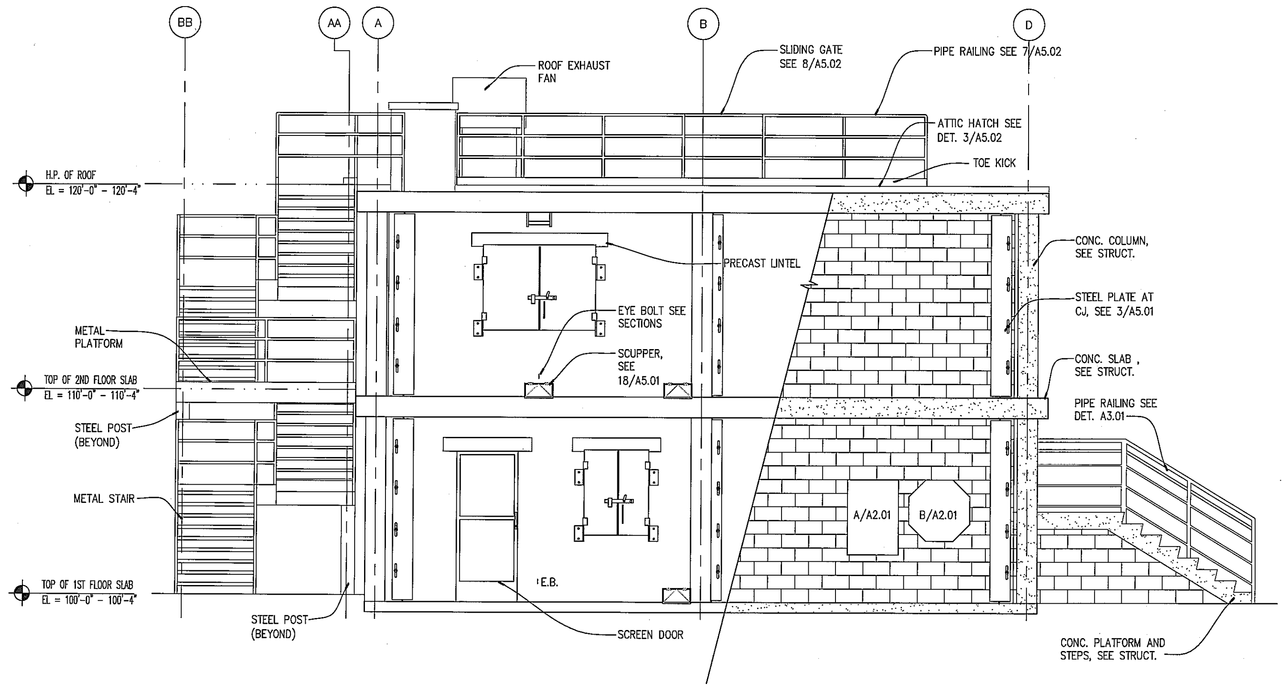


1 SOUTH ELEVATION
1/4" = 1'-0"

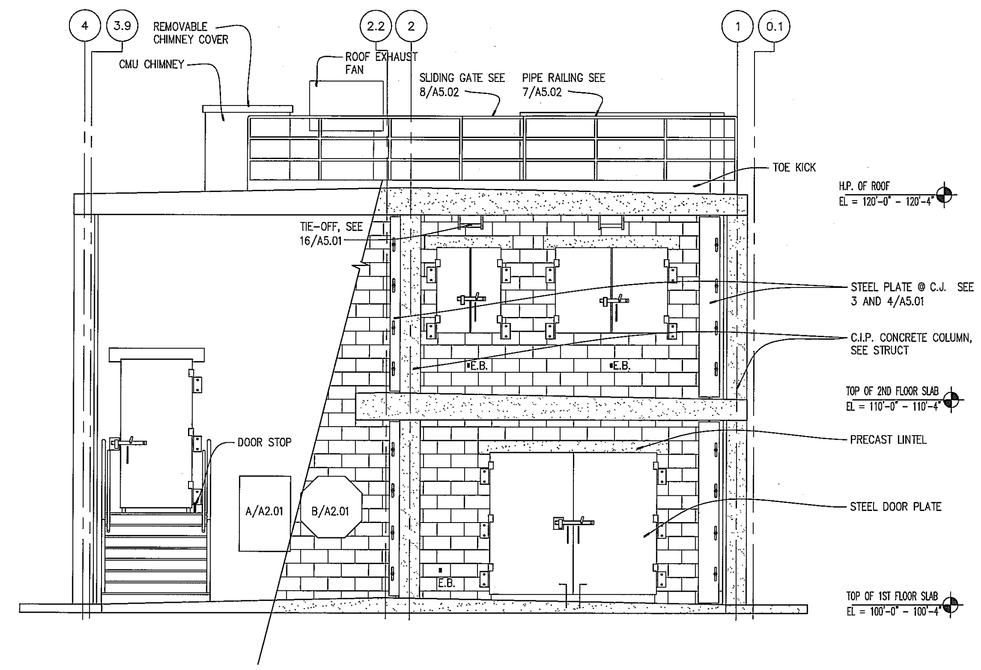


3 EAST ELEVATION
1/4" = 1'-0"

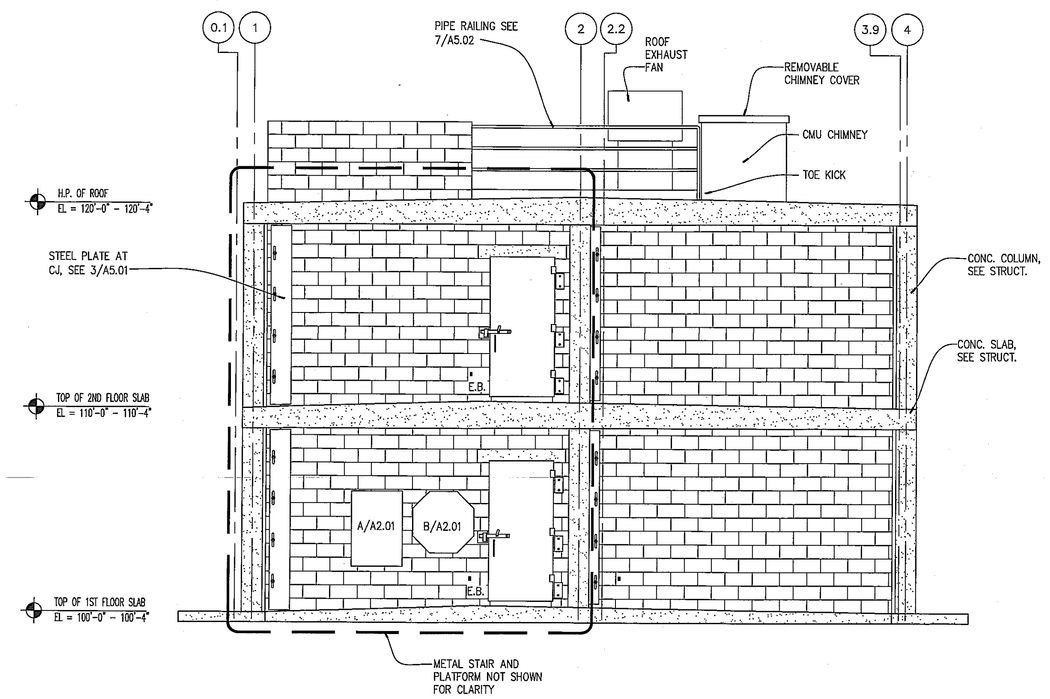


2 WEST ELEVATION
1/4" = 1'-0"

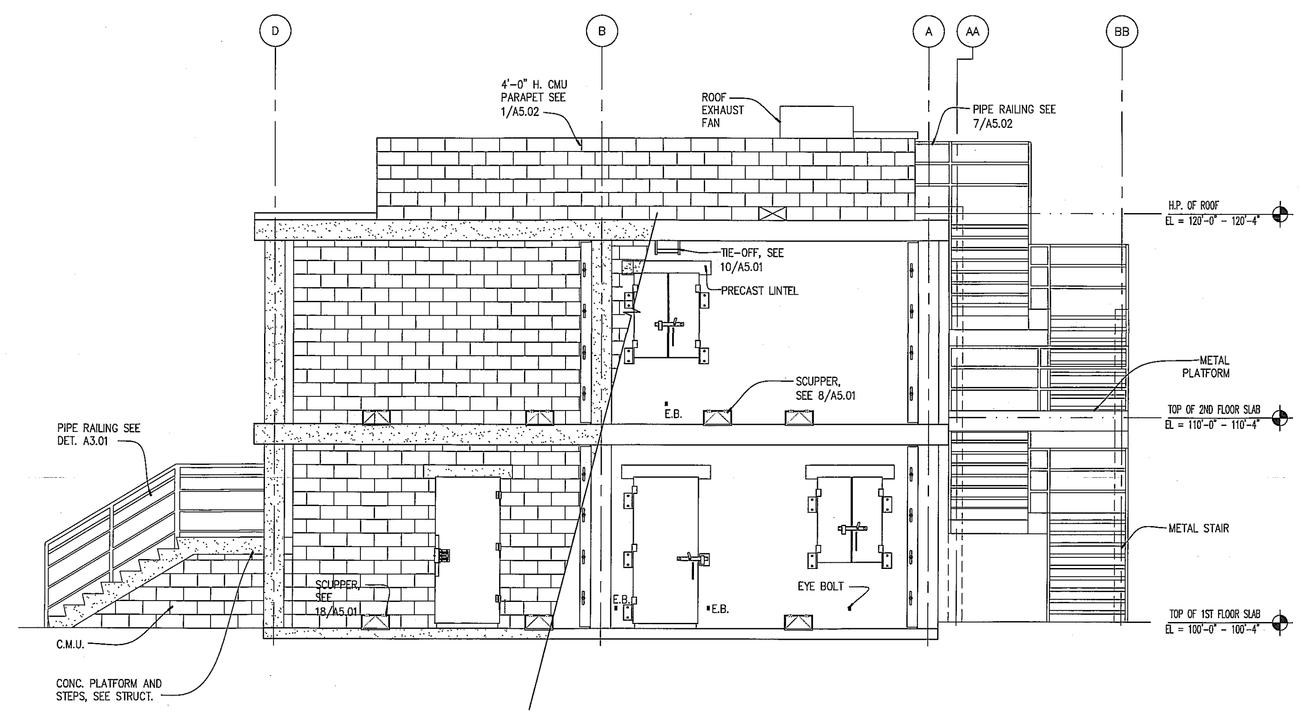


4 NORTH ELEVATION
1/4" = 1'-0"

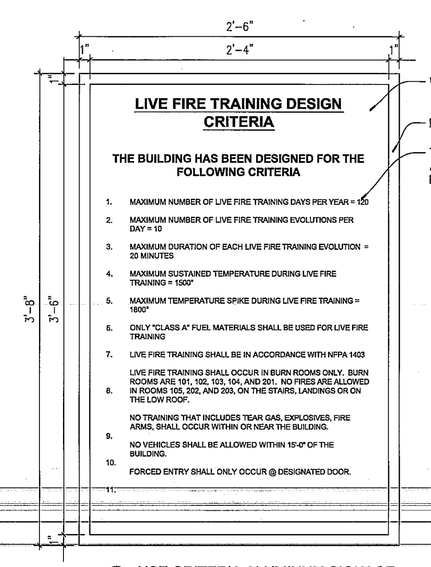


A USE CRITERIA ALUMINUM SIGNAGE
1-1/2" = 1'-0"

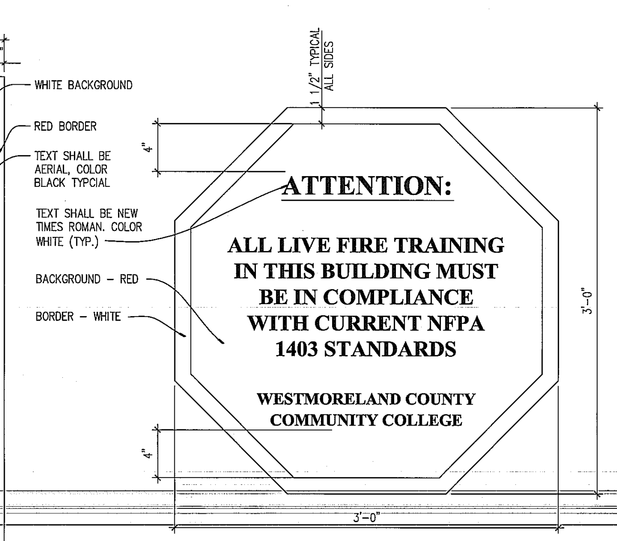


B NFPA 1403 ALUMINUM SIGNAGE
1-1/2" = 1'-0"


L. Robert Kimball & Associates
Architects and Engineers, Inc.

615 West Highland Ave.
Ebensburg, PA 15931

phone (814) 472-7700
fax (814) 472-7712
email oebldgs@lrkimball.com
web site www.lrkimball.com


CONSULTANTS

PROFESSIONAL

PROJECT NAME:

WESTMORELAND COUNTY COMMUNITY COLLEGE CLASS A BURN BUILDING

OWNER:

WESTMORELAND COUNTY COMMUNITY COLLEGE

YOUNGWOOD, PA 15697

KEYPLAN

| MARK | DATE | DESCRIPTION |
|---|---|---|
| ISSUE: | 05 / 02 / 07 | |
| PROJECT NO: | 07- 2200 - 0175 | |
| CAD DWG FILE: | XXXXXXXX.dwg | |
| DRAWN BY: | AK/LE | |
| CHECKED BY: | DG | |

© L. Robert Kimball & Associates Architects and Engineers, Inc.

SHEET TITLE

BUILDING ELEVATIONS

A2.01

H:\PROJ\07-0175\AE\RCH\(A03)\PLOT\070175_A201.dwg
May 02, 2007 - 12:49pm

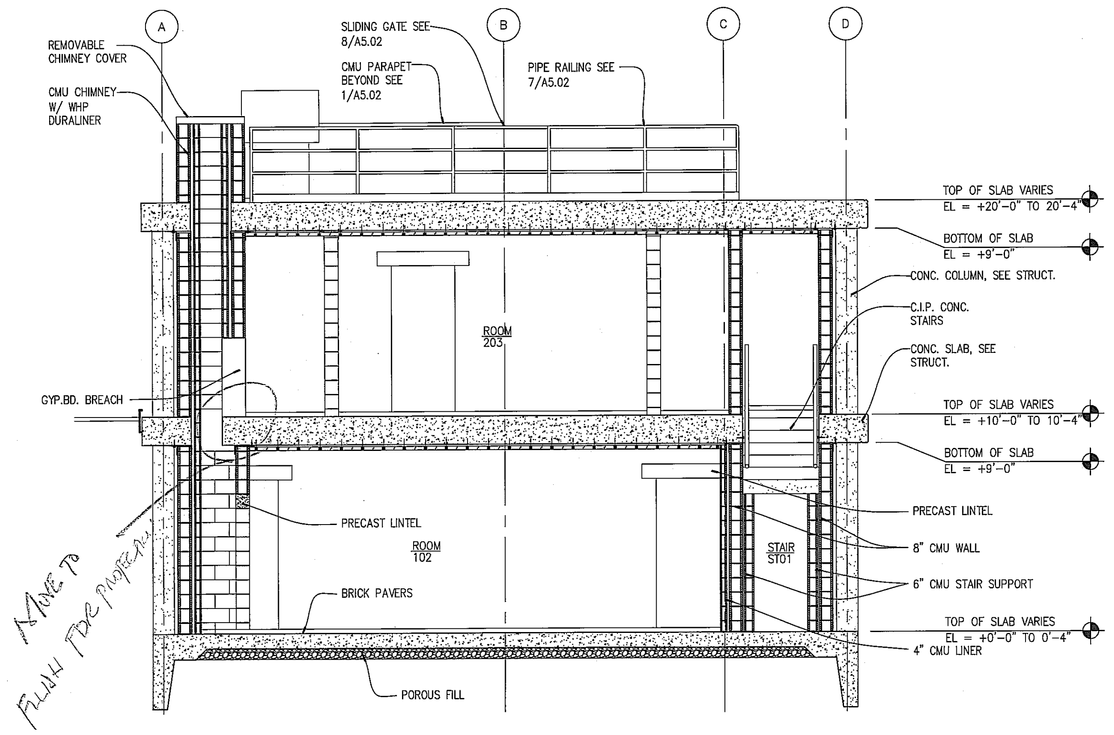


1 BUILDING SECTION
1/4" = 1'-0"

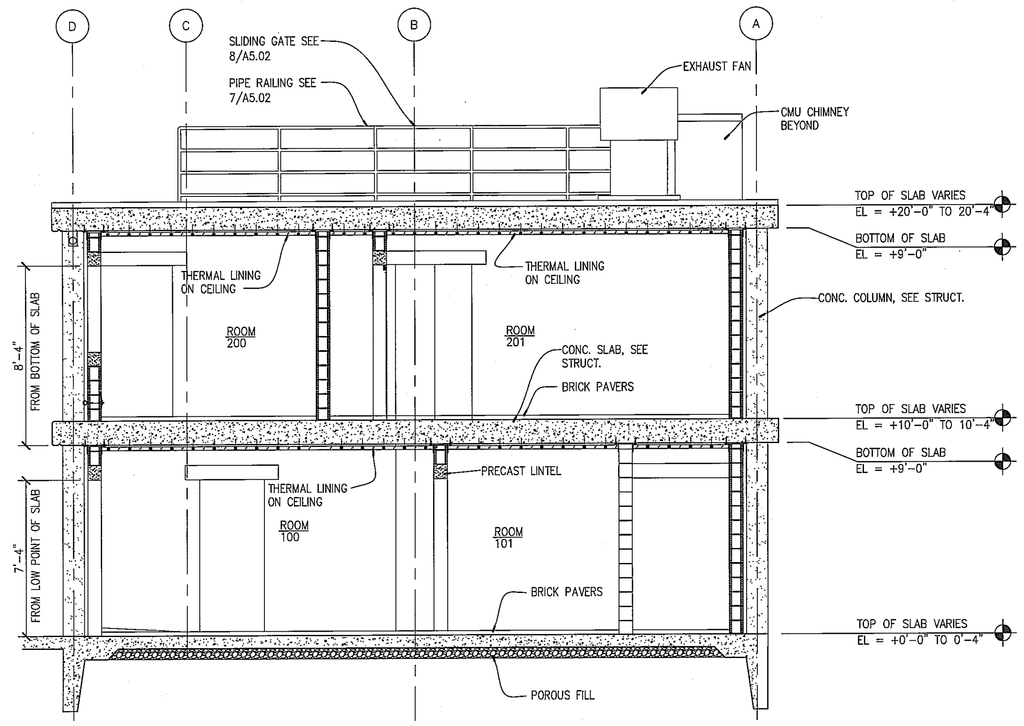


2 BUILDING SECTION
1/4" = 1'-0"

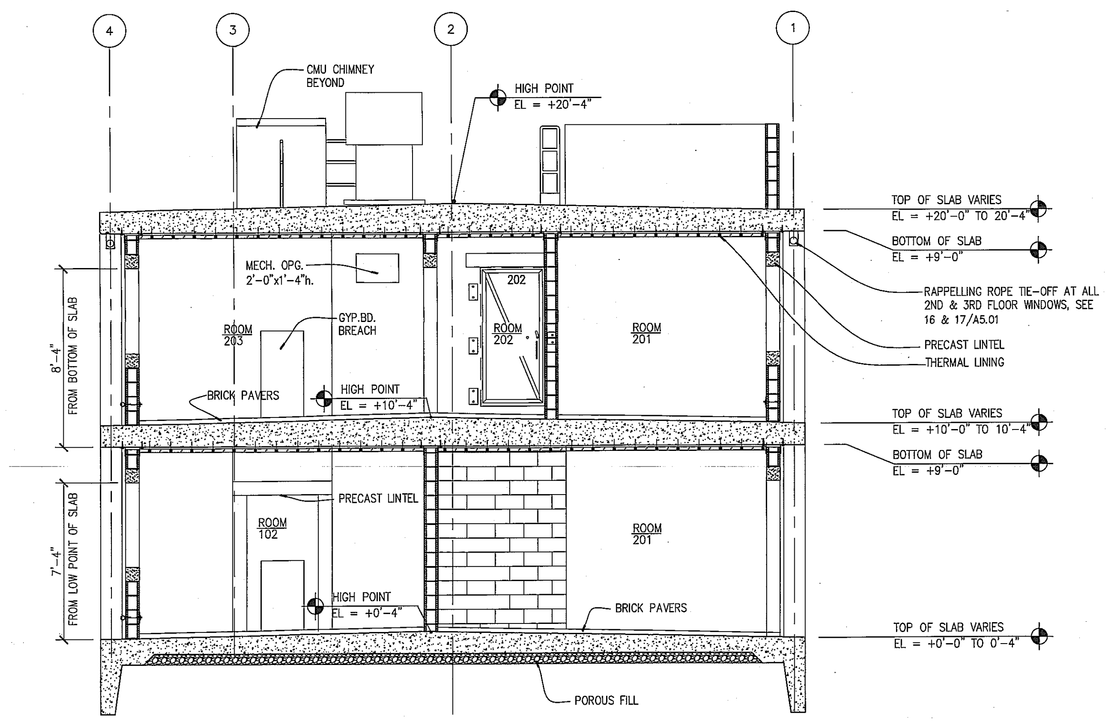


3 BUILDING SECTION
1/4" = 1'-0"

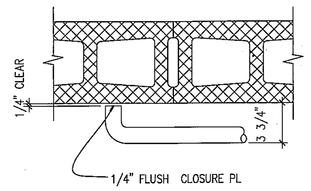


PLAN DETAIL – WALL RETURN
TYPICAL ALL HAND RAILS
A INTERIOR HANDRAIL DETAIL
1-1/2" = 1'-0"

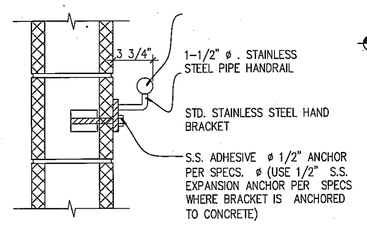


SECTION AT WALL CONNECTION
B INTERIOR HAND RAIL DETAIL
1-1/2" = 1'-0"

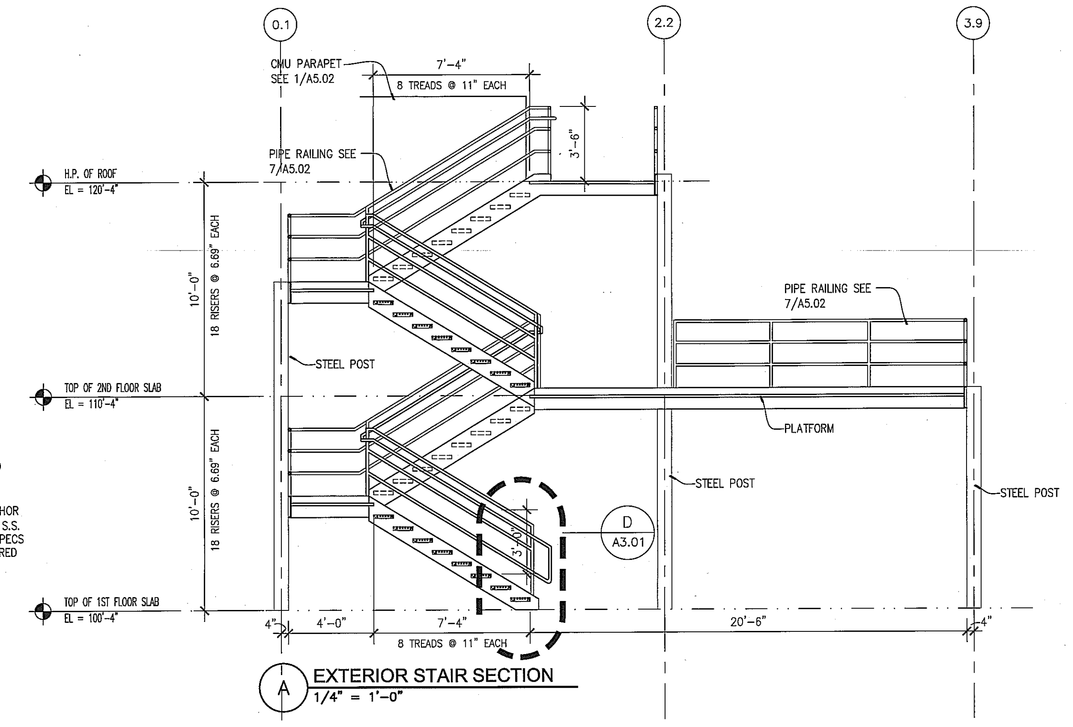


A EXTERIOR STAIR SECTION
1/4" = 1'-0"

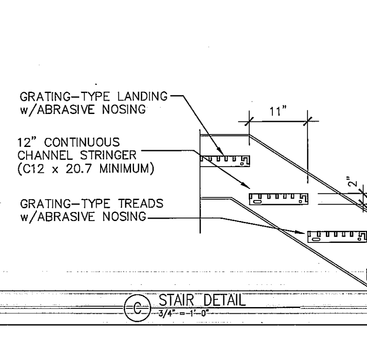


C STAIR DETAIL
3/4" = 1'-0"

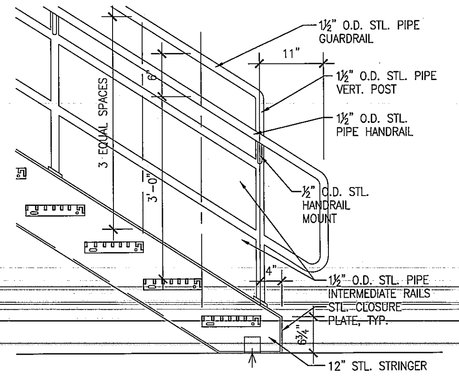


D STAIR DETAIL
3/4" = 1'-0"

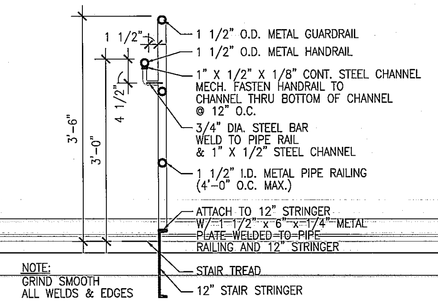


E STAIR DETAIL
3/4" = 1'-0"

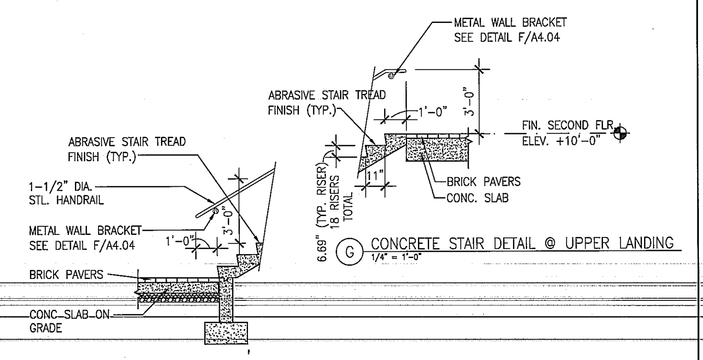


F CONCRETE STAIR DETAIL @ LOWER LANDING
1/4" = 1'-0"

G CONCRETE STAIR DETAIL @ UPPER LANDING
1/4" = 1'-0"


Kimball
L. Robert Kimball & Associates
Architects and Engineers, Inc.
615 West Highland Ave.
Ebensburg, PA 15931
phone (814) 472-7700
fax (814) 472-7712
email oaklgs@lrkimball.com
web site www.lrkimball.com


CONSULTANTS

PROFESSIONAL

PROJECT NAME:

# WESTMORELAND COUNTY COMMUNITY COLLEGE CLASS A BURN BUILDING

OWNER:

WESTMORELAND COUNTY COMMUNITY COLLEGE

YOUNGWOOD, PA 15697

KEYPLAN

| MARK | DATE | DESCRIPTION |
|---|---|---|

| | |
|---|---|
| ISSUE: | 05 / 02 / 07 |
| PROJECT NO: | 07- 2200 - 0175 |
| CAD DWG FILE: | XXXXXXXX.dwg |
| DRAWN BY: | AK/LE |
| CHECKED BY: | DG |

© L. Robert Kimball & Associates Architects and Engineers, Inc.

SHEET TITLE

BUILDING SECTIONS

A3.01

H:\PROJ\07-0175\EV&CH\JADD\PLOT\070175_A301.dwg
May 02, 2007 - 1:17pm

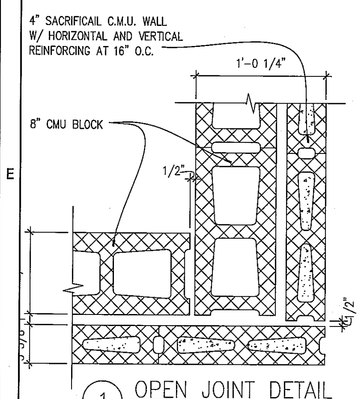


1 OPEN JOINT DETAIL
1-1/2" = 1'-0"

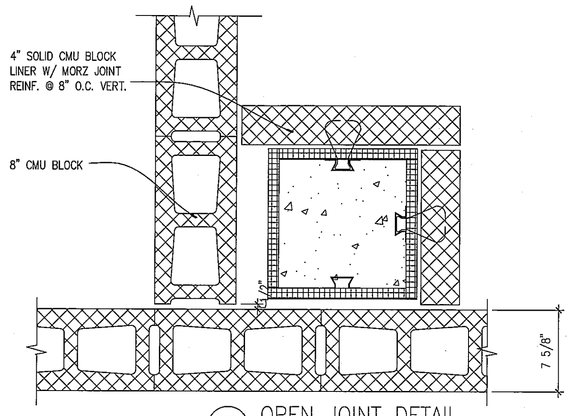


2 OPEN JOINT DETAIL
1-1/2" = 1'-0"

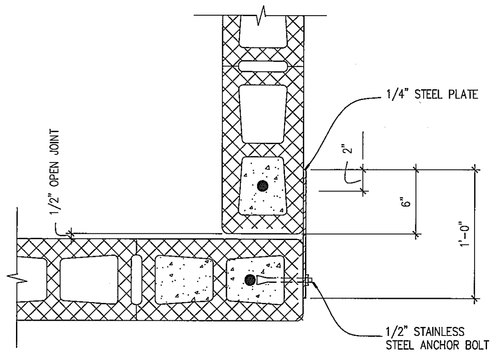


NOTE: SLOT BOLT HOLES IN STEEL PLATE.

EXTERIOR CORNERS

3 STEEL PLATE OVER CORNER OPEN JOINT
3/4" = 1'-0"

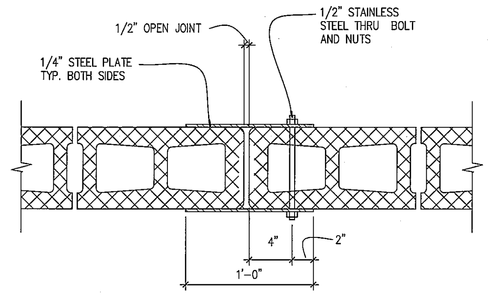


EXTERIOR WALLS

4 STEEL PLATE OVER MID-WALL OPEN JOINT
3/4" = 1'-0"

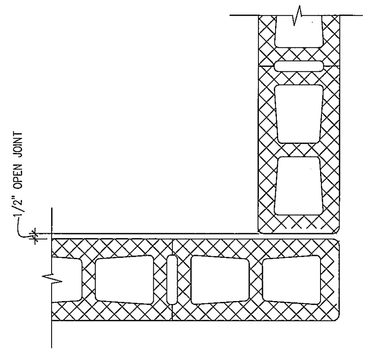


CORNER

5 OPEN JOINT @ CORNER
3/4" = 1'-0"

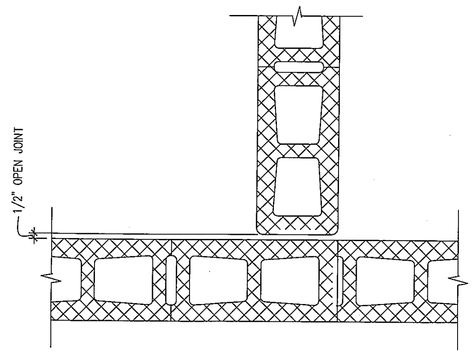


INTERSECTION

6 OPEN JOINT @ INTERSECTION
3/4" = 1'-0"

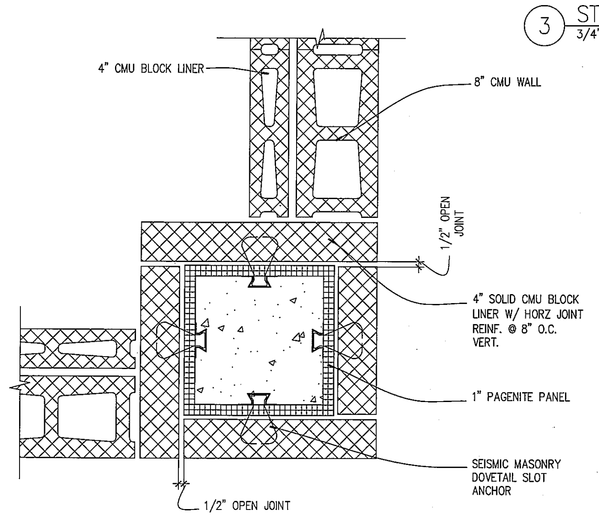


7 MASONRY OPEN JOINT DETAIL @ COLUMN
3/4" = 1'-0"

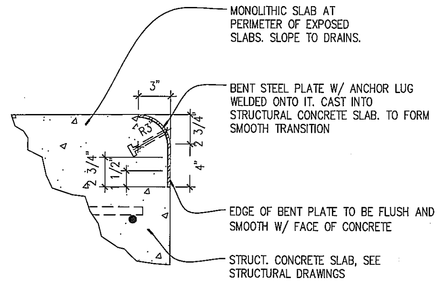


8 SLAB EDGE DETAIL
1-1/2" = 1'-0"

9 NOT USED
1-1/2" = 1'-0"

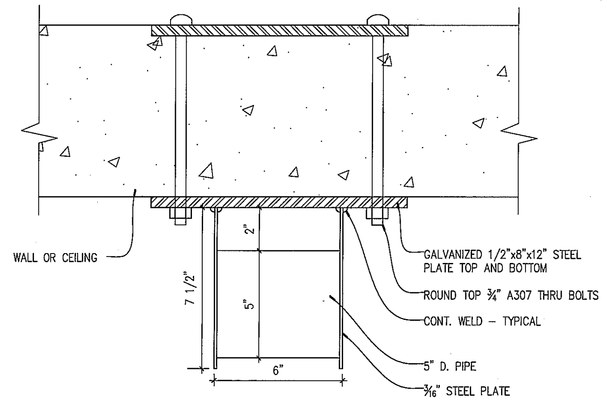


16 TIE-OFF SECTION
3" = 1'-0"

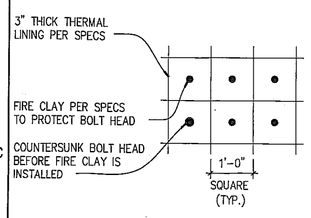


REFLECTED CEILING PLAN

10 CEILING DETAIL
1/2" = 1'-0"

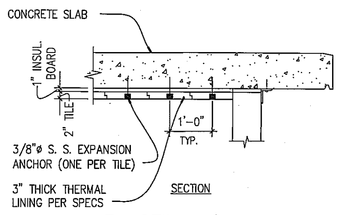


SECTION

11 CEILING/SLAB DETAIL
1/2" = 1'-0"

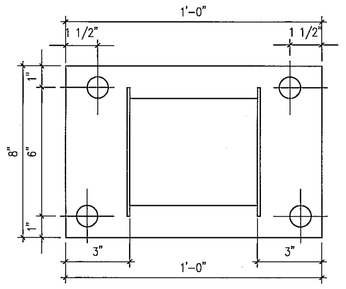


NOTE: ALL ITEMS THIS DETAIL GALVANIZED

17 TIE-OFF PLAN
3" = 1'-0"

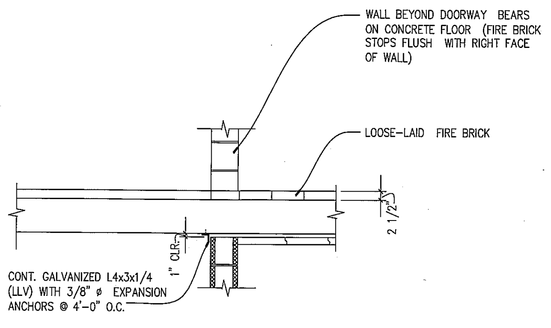


12 SECTION-SECOND FLOOR STAIR LANDING
1/2" = 1'-0"

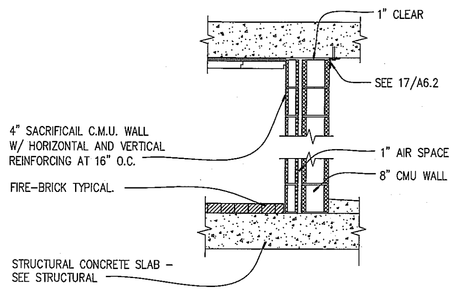


13 8" CMU WALL
1/2" = 1'-0"

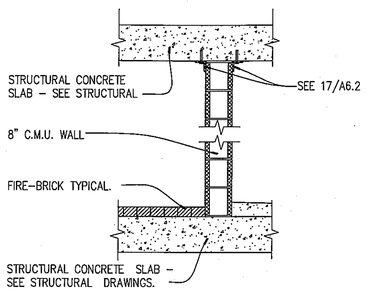


14 8" CMU WALL
1/2" = 1'-0"

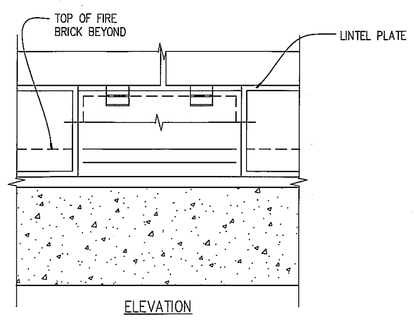


ELEVATION

18 SCUPPER ELEVATION
1-1/2" = 1'-0"

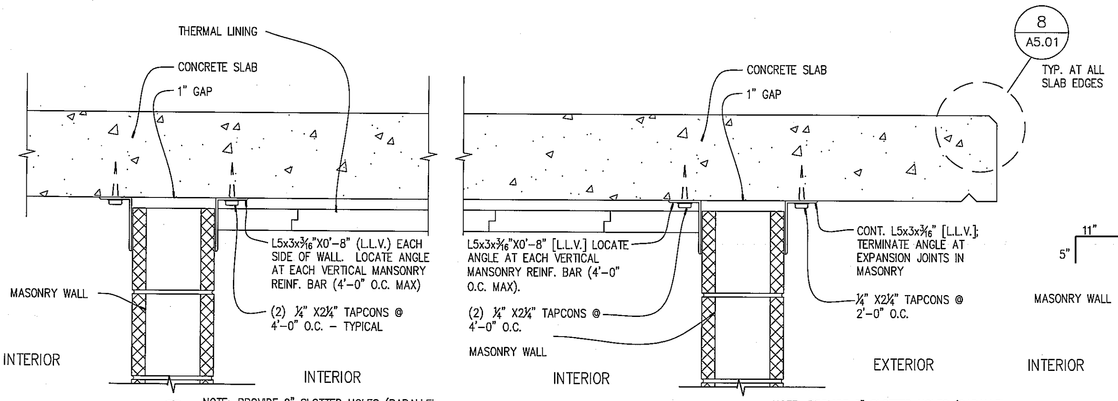


A NOTE: PROVIDE 2" SLOTTED HOLES (PARALLEL TO MASONRY WALL) IN ANGLES.

B NOTE: PROVIDE 2" SLOTTED HOLES (PARALLEL TO MASONRY WALL) IN ANGLES.

C NOTE: 1. PROVIDE 2" SLOTTED HOLES (PARALLEL TO MASONRY WALL) IN ANGLES.
2. LOCATE PLATE AND ANGLE AT EACH VERT. MASONRY REINF. BARS (4'-0" O.C. MAX)

D NOTE: PROVIDE 2" SLOTTED HOLES (PARALLEL TO MASONRY WALL) IN ANGLES AND PLATE.

GENERAL NOTES FOR DETAILS A, B, C, AND D:
1. ALL ANGLES AND PLATES SHALL BE PLACED TIGHT AGAINST CONCRETE SLAB AND MASONRY WALL
2. ALL PLATES AND ANGLES SHALL BE GALVANIZED.

15 WALL BRACING DETAILS
1-1/2" = 1'-0"

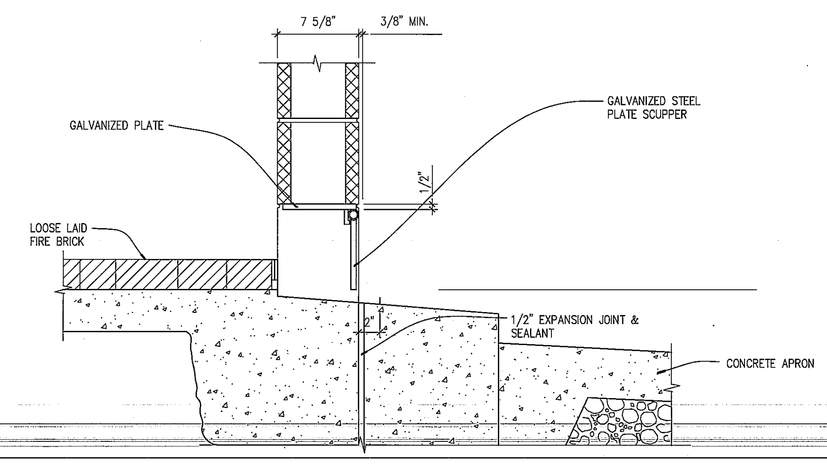


SECTION

19 SCUPPER DETAIL – TYPE 1
1-1/2" = 1'-0"


L. Robert Kimball & Associates
Architects and Engineers, Inc.

615 West Highland Ave.
Ebensburg, PA 15931

phone (814) 472-7700
fax (814) 472-7712
email aebldgs@lrkimball.com
web site www.lrkimball.com


CONSULTANTS

PROFESSIONAL

PROJECT NAME:

WESTMORELAND COUNTY COMMUNITY COLLEGE CLASS A BURN BUILDING

OWNER:

WESTMORELAND COUNTY COMMUNITY COLLEGE

YOUNGWOOD, PA 15697

KEYPLAN

| MARK | DATE | DESCRIPTION |
|---|---|---|

| | |
|---|---|
| ISSUE: | 05 / 02 / 07 |
| PROJECT NO: | 07- 2200 - 0175 |
| CAD DWG FILE: | XXXXXXXX.dwg |
| DRAWN BY: | AK/LE |
| CHECKED BY: | DG |

© L. Robert Kimball & Associates Architects and Engineers, Inc.

SHEET TITLE

MISC. DETAILS

A5.01

H:\PROJ\07-0175\AE\REV\C-ARCH.DWG May 02, 2007 - 12:28pm

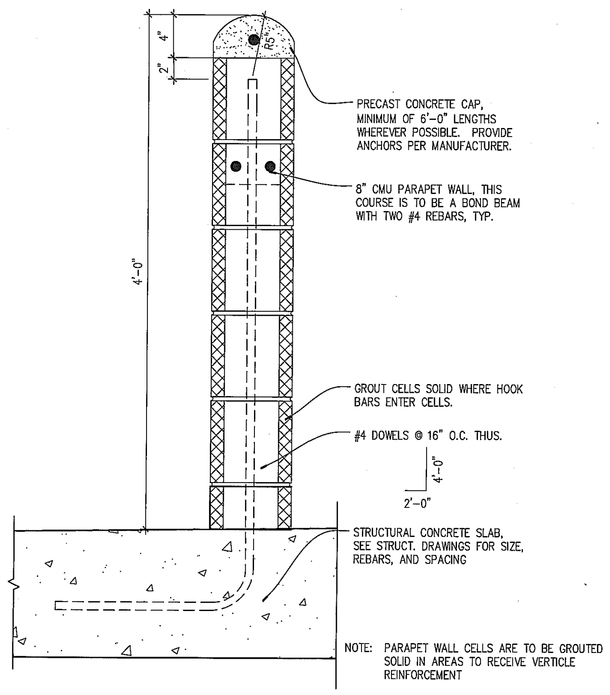


1 PARAPET DETAIL
1-1/2" = 1'-0"

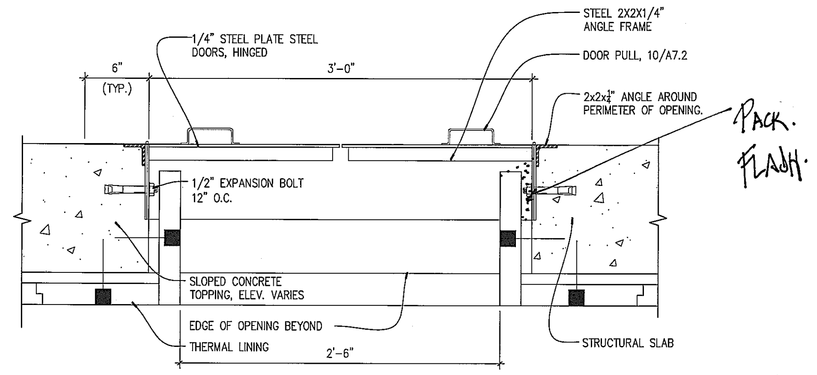


3 ATTIC HATCH DETAIL
1-1/2" = 1'-0"

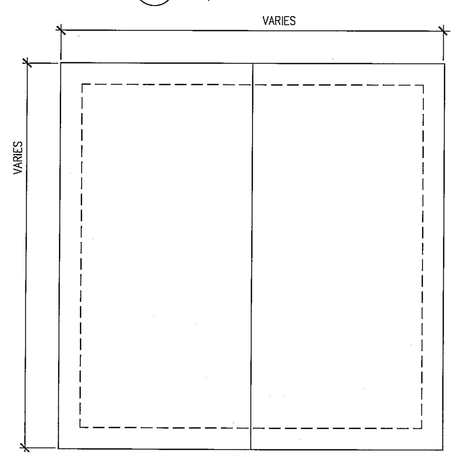


PLAN

2 ATTIC HATCH DETAIL
1-1/2" = 1'-0"

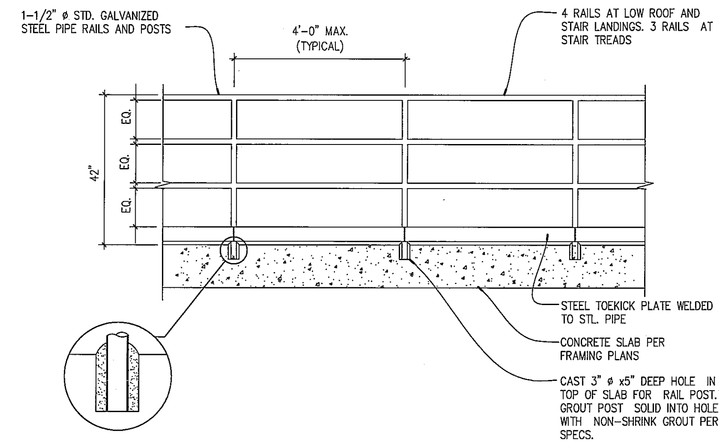


7 TYPICAL GUARD RAIL SECTION @ ROOF
1/2" = 1'-0"

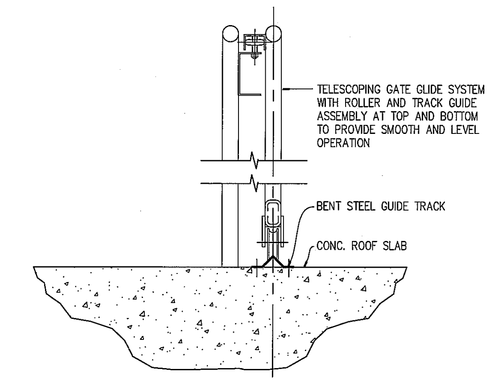


8 SLIDING GATE DETAIL
1-1/2" = 1'-0"

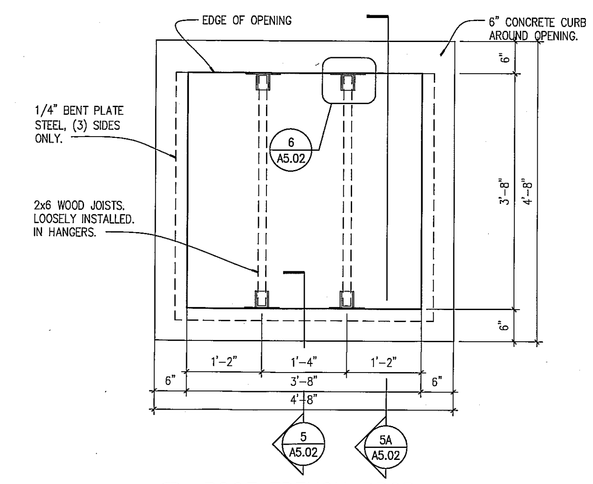


4 ROOF TRENCH PROP
3/4" = 1'-0"

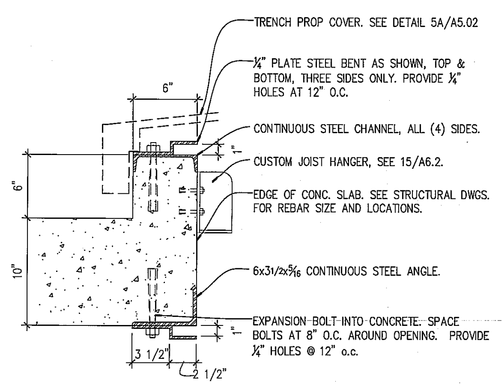


5 ROOF TRENCH PROP
1-1/2" = 1'-0"

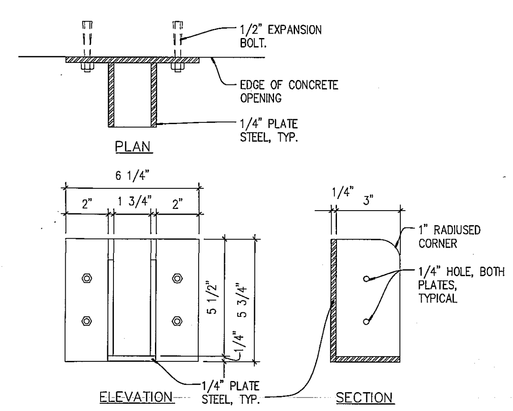


6 JOIST HANGER DETAIL
3" = 1'-0"

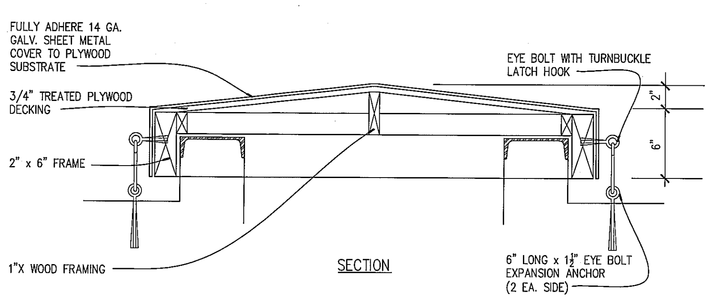


5A REMOVABLE ROOF TRENCH PROP COVER
1-1/2" = 1'-0"

## EXHAUST FAN SCHEDULE

| MARK | TYPE | CFM | SP | HP | ELECTRICAL VOLTAGE | ELECTRICAL PHASE | RPM | TS | SONE | DRIVE | BASIS OF DESIGN MANU. | BASIS OF DESIGN MODEL | REMARKS |
|---|---|---|---|---|---|---|---|---|---|---|---|---|---|
| EF-1 | ROOF UPBLAST | 15,480 | 0.75 | 5 | 208 | 3ø | 1,237 | 11,658 | 49 | BELT | GREENHECK | TAUB-36H-50 | UNIT MOUNTED DISCONNECT BY UNIT MANUFACTURER, CONTROL FAN THRU TEMPERATURE MONITORING SYSTEM |

NOTE:
1. FAN TO OPERATE BASED ON CONTROL SIGNAL FROM TEMPERATURE MONITORING SYSTEM AND FROM PANIC BUTTON LOCATED IN BUILDING
2. PROVIDE ALL REQUIRED CONTACTS, RELAYS, ETC. AS REQUIRED TO OPERATE FAN AS DESCRIBED IN SPECIFICATIONS

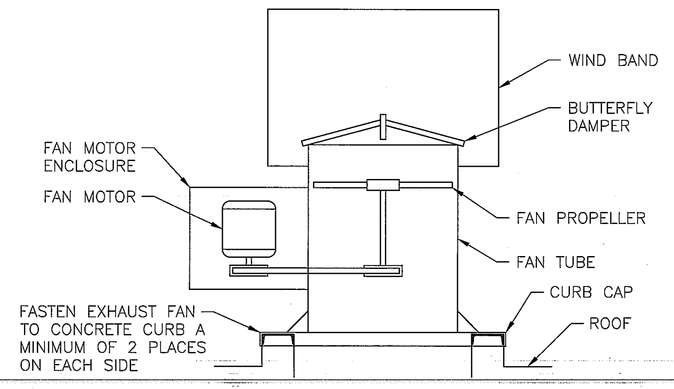


9 EXHAUST FAN CURB DETAIL
NTS


Kimball
L. Robert Kimball & Associates
Architects and Engineers, Inc.
615 West Highland Ave.
Ebensburg, PA 15931
phone (814) 472-7700
fax (814) 472-7712
email oebldgs@lrkimball.com
web site www.lrkimball.com


CONSULTANTS

PROFESSIONAL

PROJECT NAME:

WESTMORELAND COUNTY COMMUNITY COLLEGE CLASS A BURN BUILDING

OWNER:

WESTMORELAND COUNTY COMMUNITY COLLEGE
YOUNGWOOD, PA 15697

KEYPLAN

| MARK | DATE | DESCRIPTION |
|---|---|---|

| | |
|---|---|
| ISSUE: | 05 / 02 / 07 |
| PROJECT NO: | 07- 2200 - 0175 |
| CAD DWG FILE: | XXXXXXXX.dwg |
| DRAWN BY: | AK/LE |
| CHECKED BY: | DG |

© L. Robert Kimball & Associates Architects and Engineers, Inc.

SHEET TITLE

ROOF DETAILS

A5.02

H:\PROJ\07-0175\ME\ARCH\CADD\PLOT\070175_A502.dwg
May 02, 2007 - 12:29pm

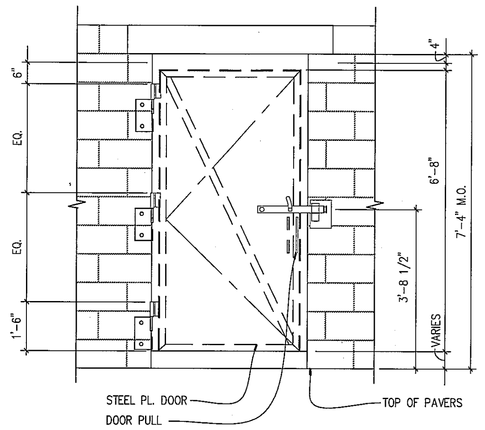


TYPE A – PLATE STEEL DOOR
1/2" = 1'-0"

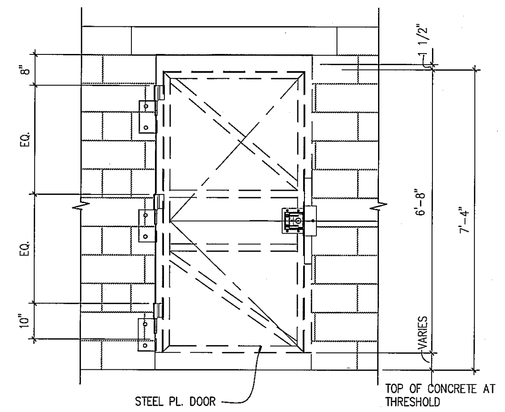


TYPE B – PLATE STEEL FORCIBLE ENTRY
1/2" = 1'-0"

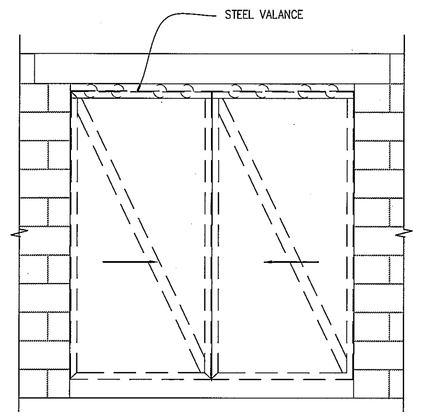


TYPE C – PLATE STEEL SLIDING DOOR
1/2" = 1'-0"

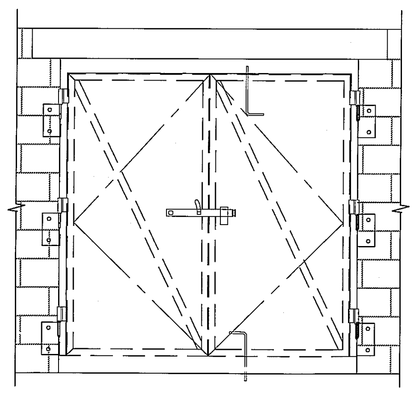

TYPE D – PLATE STEEL DOUBLE DOOR
1/2" = 1'-0"

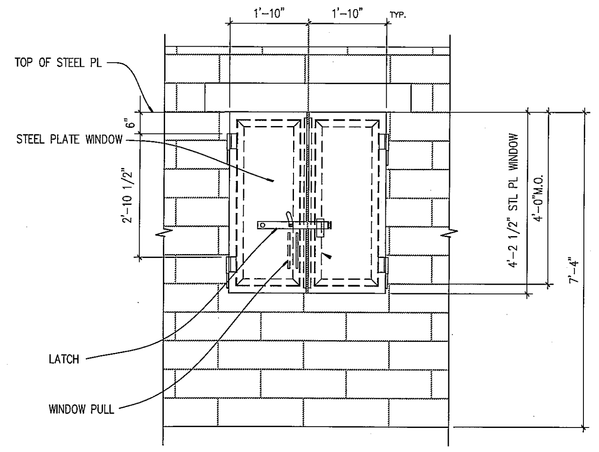


TYPE G – STEEL SHUTTER ELEVATION
1/2" = 1'-0"

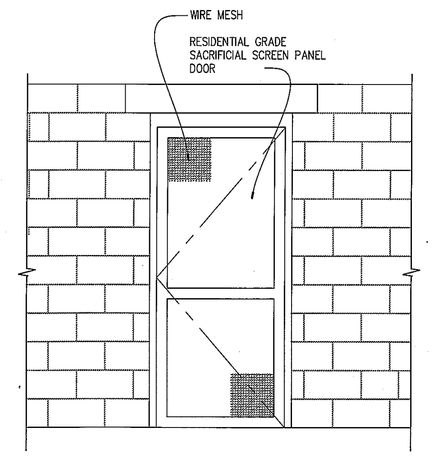


TYPE F – WOOD SCREEN DOOR
1/2" = 1'-0"

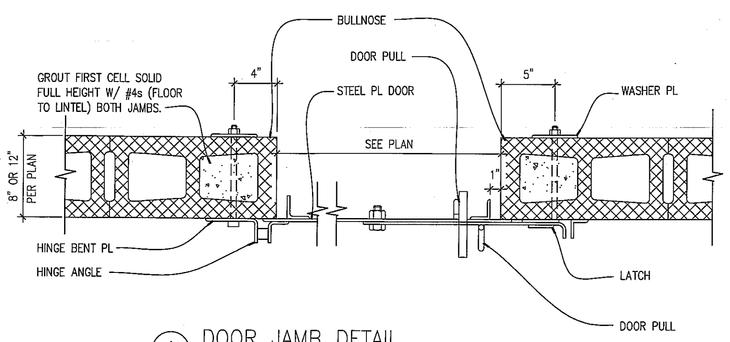


1 DOOR JAMB DETAIL
1-1/2" = 1'-0"

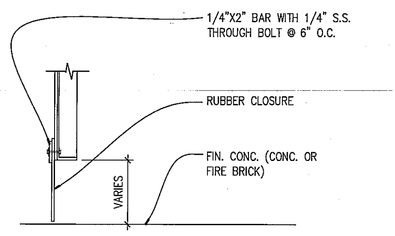


2 DOOR SILL DETAIL
1-1/2" = 1'-0"

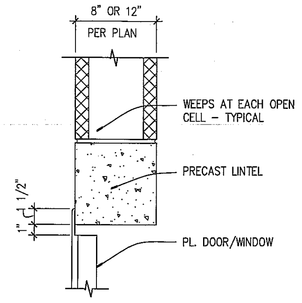


3 DOOR OR WINDOW HEAD DETAIL
1-1/2" = 1'-0"

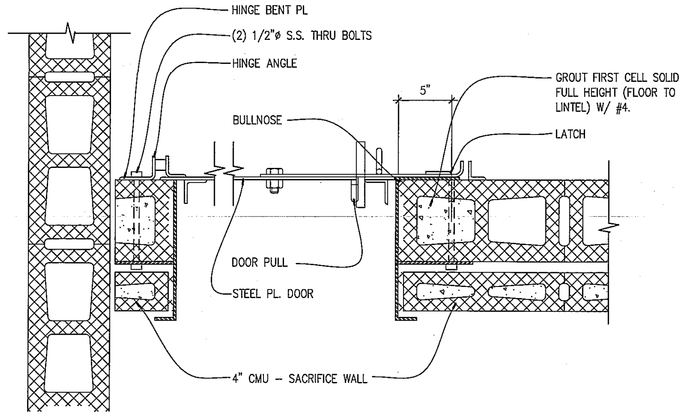


4 DOOR JAMB DETAIL
1-1/2" = 1'-0"

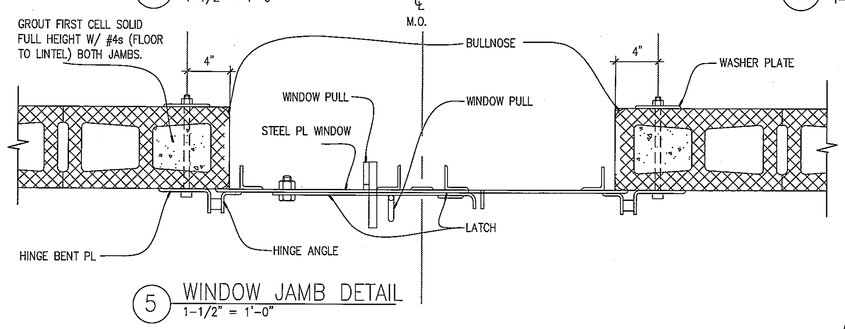


5 WINDOW JAMB DETAIL
1-1/2" = 1'-0"

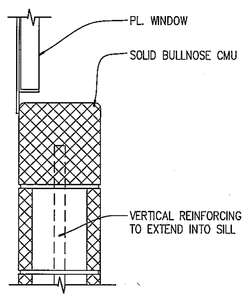


6 WINDOW SILL DETAIL
1-1/2" = 1'-0"

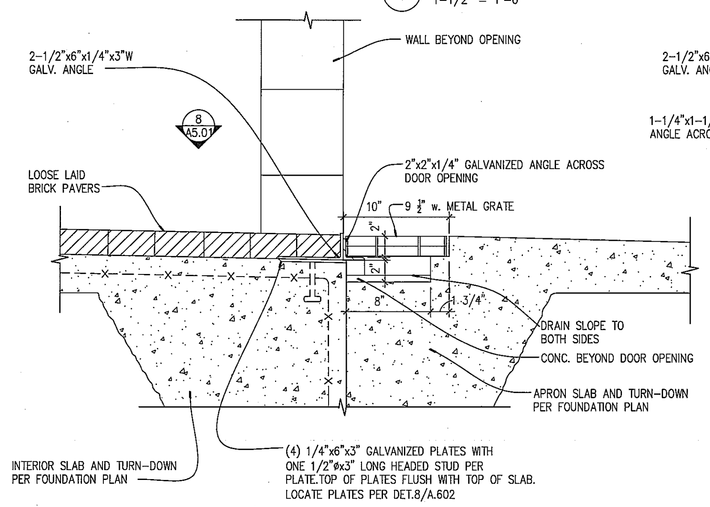


7 EXTERIOR DOOR THRESHOLD
1-1/2" = 1'-0"

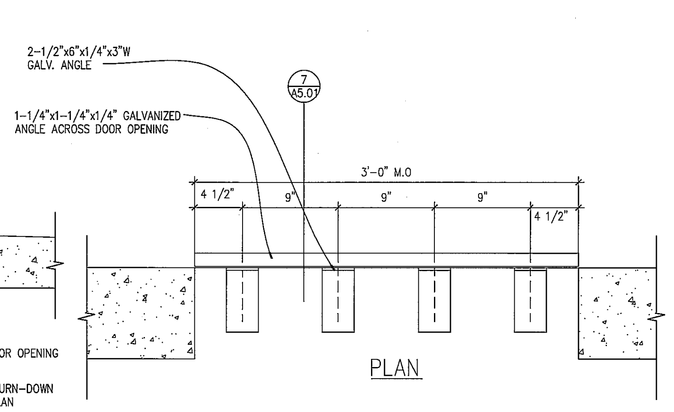


8 EXTERIOR DOOR THRESHOLD
1-1/2" = 1'-0"

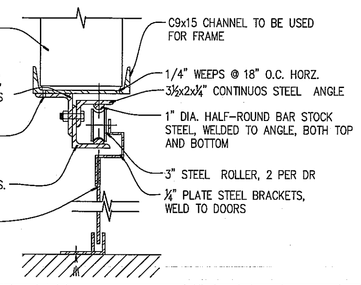


9 STL. SLIDING DOOR HEAD/SILL DETAIL
1-1/2" = 1'-0"

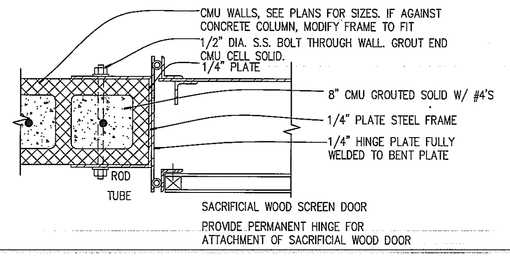


10 FORCIBLE ENTRY DOOR
1-1/2" = 1'-0"

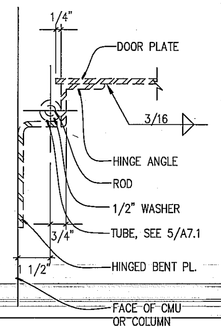


11 DOOR HINGE DETAIL
3" = 1'-0"


Kimball
L. Robert Kimball & Associates
Architects and Engineers, Inc.
615 West Highland Ave.
Ebensburg, PA 15931
phone (814) 472-7700
fax (814) 472-7712
email ebldgs@lrkimball.com
web site www.lrkimball.com


CONSULTANTS

PROFESSIONAL

PROJECT NAME:

WESTMORELAND COUNTY COMMUNITY COLLEGE CLASS A BURN BUILDING

OWNER:

WESTMORELAND COUNTY COMMUNITY COLLEGE

YOUNGWOOD, PA 15697

KEYPLAN

| MARK | DATE | DESCRIPTION |
|---|---|---|
| | | |
| | | |
| | | |
| | | |
| | | |
| | | |
| | | |
| | | |
| | | |
| | | |

| | |
|---|---|
| ISSUE: | 05 / 02 / 07 |
| PROJECT NO: | 07- 2200 - 0175 |
| CAD DWG FILE: | XXXXXXXX.dwg |
| DRAWN BY: | AK/LE |
| CHECKED BY: | DG |

© L. Robert Kimball & Associates Architects and Engineers, Inc.

SHEET TITLE

DOOR TYPES AND DETAILS

A6.01

H:\PROJ\07-0175\ME\ARCH\CADD\PLOT\070175_A601.dwg
May 02, 2007 - 12:29pm

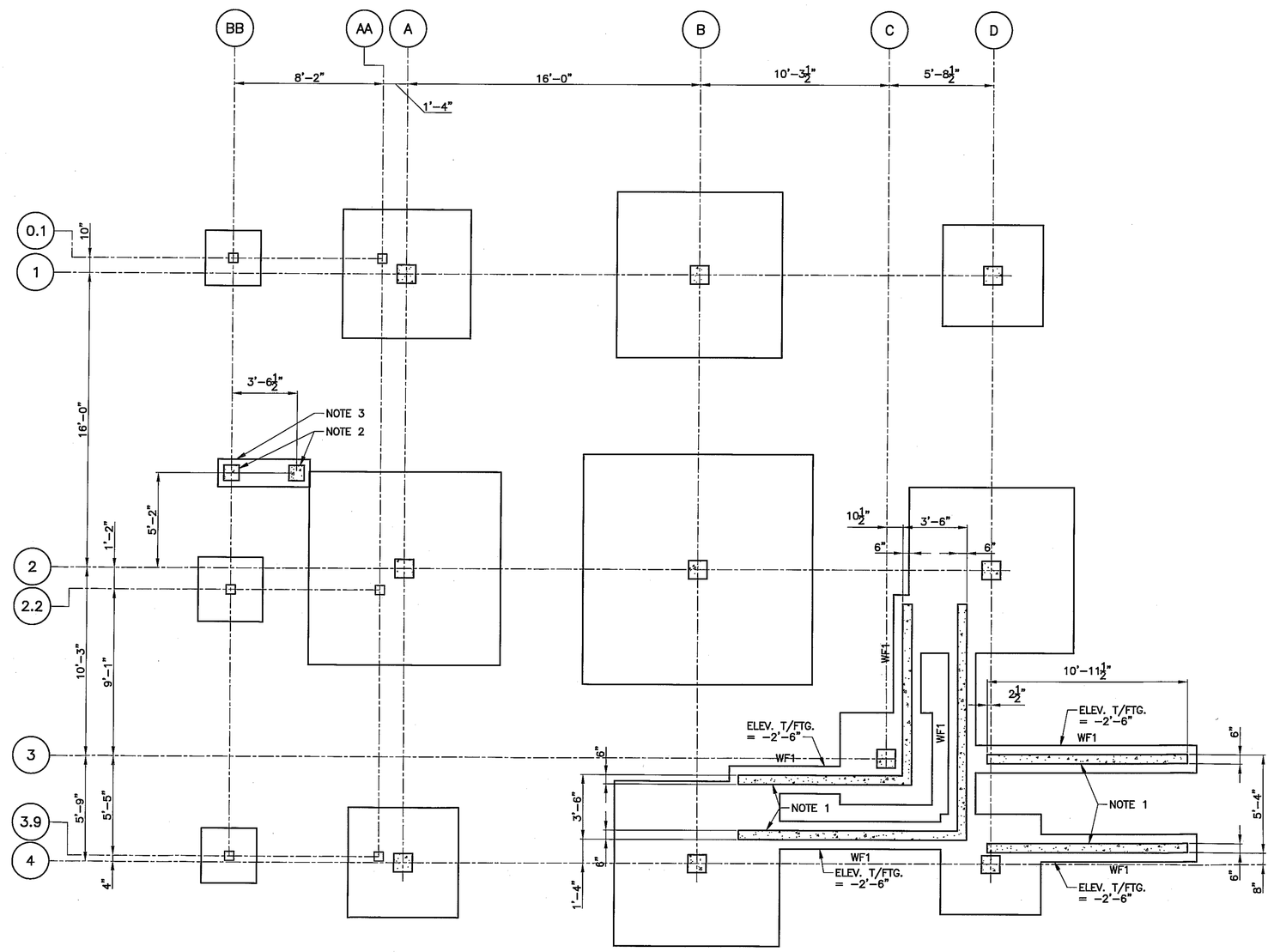


## FOUNDTION PLAN

SCALE: ¼" = 1'-0"

NOTES:

1. 6" CONC. WALL REINF. W/ #4 @ 12" O.C. HORIZ. & VERT.
2. 10" CONC. PIER REINF. W/ 4-#5 VERT. & #3 TIES @ 8" O.C.
3. 5'-0"x1'-6"x1'-0" THICK FTG. REINF. W/ 3-#5 LONGITUDINAL & 6-#5 TRANSVERSE ELEV. T/FTG. = -2'-6".

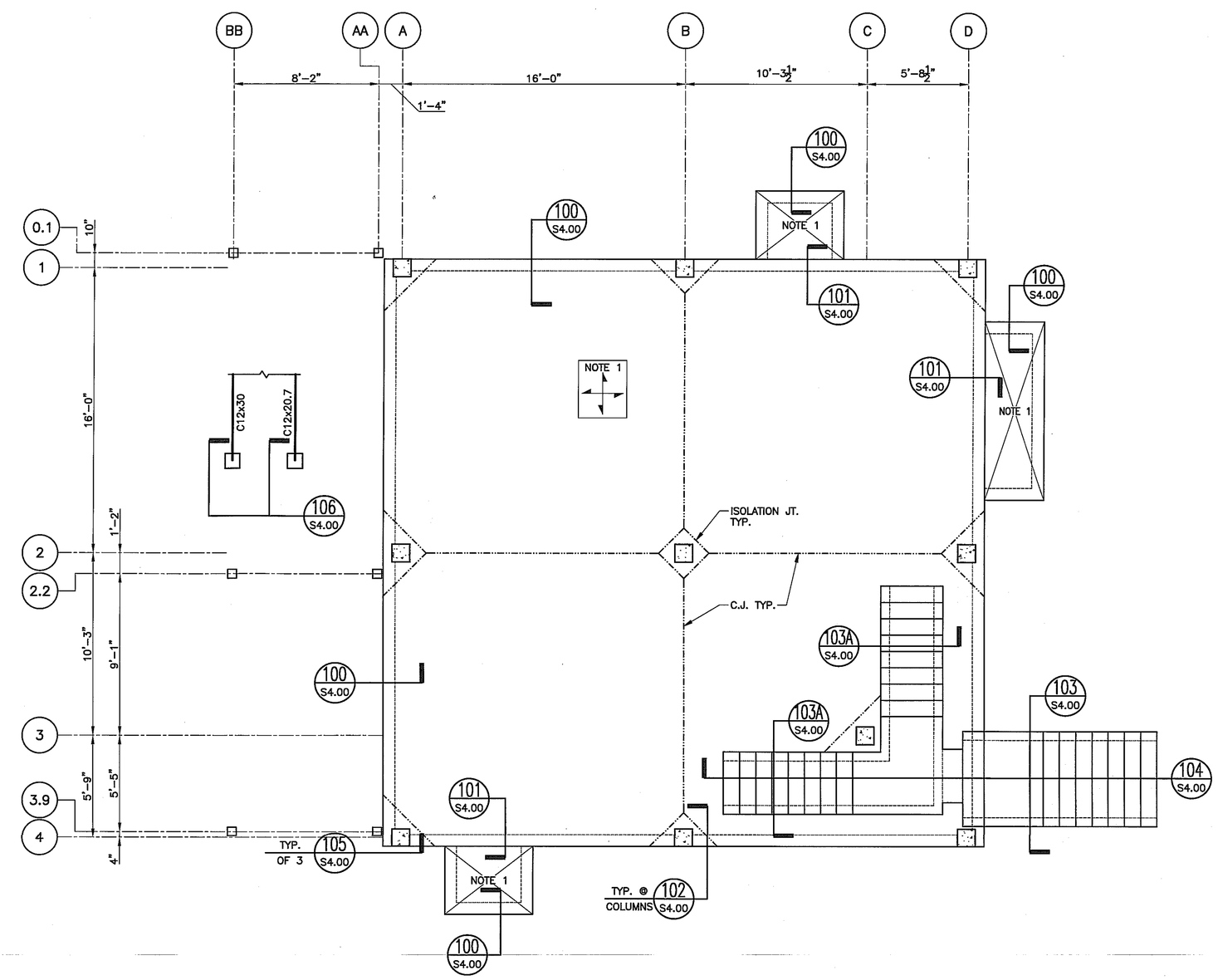


## SLAB ON GRADE PLAN

SCALE: ¼" = 1'-0"

NOTES:

1. 6" MIN. CONC. SLAB ON GRADE REINF. W/ #3 @ 18" O.C. EACH WAY SLAB THICKNESS VARIES FROM 6" MIN. TO 10" MAX. ELEV. T/SLAB = VARIES SEE ARCH. DWGS.
2. PROVIDE "THICKENED SLAB AT CONCRETE MASONRY WALL PARTITIONS DETAIL" ON SHEET S3.00.

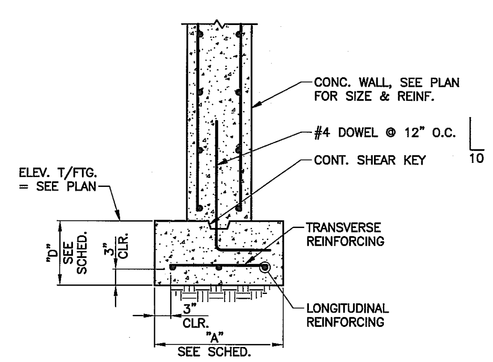


## TYPICAL CONTINUOUS WALL FOOTING DETAIL

CONTINUOUS WALL FOOTING SCHEDULE

| MARK | WIDTH "A" | DEPTH "D" | LONGITUDINAL REINFORCING | TRANSVERSE REINFORCING | MARK |
|---|---|---|---|---|---|
| WF1 | 2'-0" | 1'-0" | 3-#5 CONT. | #5x1'-6" @ 12" O.C. | WF1 |

THIS DRAWING HAS BEEN PRODUCED ON ATLANTIC ENGINEERING SERVICES' CADD SYSTEM. ANY OTHER LETTERING, LINES OR SYMBOLS, OTHER THAN PROFESSIONAL STAMPS AND SIGNATURES, HAVE BEEN MADE WITHOUT THE AUTHORIZATION OF ATLANTIC ENGINEERING SERVICES AND ARE INVALID.

AES PROJECT #07-114 AES PLOT DATE: 04.30.07

Kimball
L. Robert Kimball & Associates
Architects and Engineers, Inc.
615 West Highland Ave.
Ebensburg, PA 15931
phone (814) 472-7700
fax (814) 472-7712
email aeblgs@lrkimball.com
web site www.lrkimball.com

CONSULTANTS

Atlantic Engineering Services
650 Smithfield Street • Suite 1200
Pittsburgh • Pennsylvania 15222
Phone: 412.338.9000 Fax: 412.338.0051
Email: pgh@oncpj.com

PROFESSIONAL

COMMONWEALTH OF PENNSYLVANIA REGISTERED PROFESSIONAL ROBERT SERGIO BERTOCCHI ENGINEER

PROJECT NAME:

# WESTMORELAND COUNTY COMMUNITY COLLEGE CLASS A BURN BUILDING

OWNER:

WESTMORELAND COUNTY COMMUNITY COLLEGE

YOUNGWOOD, PA 15697

KEYPLAN

| MARK | DATE | DESCRIPTION |
|---|---|---|

| | |
|---|---|
| ISSUE: | 05 / 02 / 07 |
| PROJECT NO: | 07-2200-0175 |
| CAD DWG FILE: | |
| DRAWN BY: | BJS |
| CHECKED BY: | RSB |

© L. Robert Kimball & Associates Architects and Engineers, Inc.

SHEET TITLE

FOUNDATION AND SLAB ON GRADE PLAN

S1.00

## GENERAL NOTES

### 100. DESIGN CRITERIA

100.1 DESIGN BUILDING CODE:

A. INTERNATIONAL BUILDING CODE, 2006

100.2 GRAVITY LOADS:

A. FLOOR LIVE LOADS:
1. PARTITIONS _____ 50 PSF
2. TRAINING OCCUPANCY _____ 110 PSF
3. STAIRS _____ 100 PSF

B. ROOF LIVE LOADS:
1. TRAINING OCCUPANCY _____ 110 PSF

C. SNOW LOADS:
1. BASE GROUND SNOW LOAD, Pg _____ 30 PSF
2. FLAT ROOF SNOW LOAD, Pf _____ 21 PSF
3. SNOW EXPOSURE FACTOR, Ce _____ 1.0
4. SNOW LOAD INPORTANCE FACTOR, Is _____ 1.0
5. THERMAL FACTOR, Ct _____ 1.0

100.3 LATERAL LOADS:

A. WIND LOADS (IN ACCORDANCE WITH DESIGN BUILDING CODE PER GENERAL NOTE 100.1):
1. BASIC WIND SPEED (3 SECOND GUST) = 90 MPH
2. WIND IMPORTANCE FACTOR (Iw) = 1.0
3. OCCUPANCY CATEGORY = II
4. EXPOSURE CATEGORY = C
5. ENCLOSURE CLASSIFICATION = ENCLOSED
6. INTERNAL PRESSURE COEFFICIENT (GCpi) = ± 0.18

B. EARTHQUAKE LOADS IN ACCORDANCE WITH DESIGN BUILDING CODE PER GENERAL NOTE 100.1):
1. SEISMIC IMPORTANCE FACTOR _____ 1.0
2. OCCUPANCY CATEGORY _____ II
3. Ss _____ .127
4. S1 _____ .049
5. SITE CLASS _____ D
6. SDs _____ 0.135
7. SD1 _____ 0.078
8. SEISMIC DESIGN CATEGORY _____ B
9. BASIC SEISMIC FORCE RESISTING SYSTEM _____ REINF. CONCRETE MOMENT FRAME
10. RESPONSE MODIFICATION FACTOR R _____ 3.0
11. ANALYSIS PROCEDURE _____ EQUIV. LAT. FORCE

### 110. GENERAL

110.1 THIS DRAWING HAS BEEN PRODUCED ENTIRELY ON ATLANTIC ENGINEERING SERVICES CADD SYSTEM. ANY OTHER LETTERING, LINES OR SYMBOLS, OTHER THAN PROFESSIONAL STAMPS AND SIGNATURES, HAVE BEEN MADE WITHOUT THE AUTHORIZATION OF ATLANTIC ENGINEERING SERVICES AND ARE INVALID.

110.2 THE STRUCTURAL DRAWINGS SHALL GOVERN THE WORK FOR ALL STRUCTURAL FEATURES, UNLESS NOTED OTHERWISE. THE ARCHITECTURAL DRAWINGS SHALL GOVERN THE WORK FOR ALL DIMENSIONS.

110.3 THE METHOD AND FREQUENCY OF ATTACHING MECHANICAL EQUIPMENT UNITS, ETC., TO THE STRUCTURAL ELEMENTS SHALL BE SUBJECT TO THE ENGINEERS REVIEW AND APPROVAL.

110.4 THE CONTRACTOR SHALL VERIFY ALL EXISTING CONDITIONS, DIMENSIONS, ETC., AND SHALL NOTIFY THE ARCHITECT OF ANY AND ALL DISCREPANCIES, ADDITIONAL INFORMATION, ETC., BEFORE BEGINNING THE WORK.

110.5 THE CONTRACTOR SHALL USE EXTREME CAUTION IN THE DEMOLITION OF EXISTING STRUCTURES. SUCH DEMOLITION SHALL BE PERFORMED IN SUCH A MANNER AS TO MAINTAIN THE STRUCTURAL INTEGRITY OF ALL EXISTING STRUCTURES TO REMAIN. PROVIDE SHORING AS REQUIRED.

110.6 ALL STRUCTURAL WORK SHALL BE INSPECTED IN ACCORDANCE WITH THE BUILDING CODE AND ALL LOCAL ORDINANCES. THE OWNER SHALL ENGAGE AN EXPERIENCED, QUALIFIED INSPECTION AGENCY, SUBJECT TO THE REVIEW OF THE ARCHITECT, TO PERFORM ALL INSPECTION WORK, AS REQUIRED. THRESHOLD BUILDINGS SHALL BE INSPECTED BY A LICENCED THRESHOLD INSPECTOR IN ACCORDANCE WITH THE THRESHOLD INSPECTION PLAN.

110.7 STEP FOOTINGS BELOW ALL SANITARY AND WATER LINES. PROVIDE STEPS IN THE FOUNDATIONS IN ACCORDANCE WITH THE TYPICAL DETAILS. COORDINATE THE EXACT LOCATION AND ELEVATION OF THE PLUMBING LINES WITH THE MECHANICAL AND PLUMBING DRAWINGS AND CONTRACTORS. PROVIDE SLEEVES IN THE FOUNDATION WALLS AS REQUIRED FOR PIPE PENETRATIONS.

### 120. SHOP DRAWINGS

120.1 THE CONTRACTOR SHALL SUBMIT SHOP DRAWINGS FOR REVIEW BY ATLANTIC ENGINEERING SERVICES AND THE PROJECT ARCHITECT. SHOP DRAWINGS SHALL BE SUBMITTED FOR ALL STRUCTURAL COMPONENTS INCLUDING, BUT NOT LIMITED TO THE FOLLOWING:

A. FABRICATED STRUCTURAL STEEL
B. REINFORCING STEEL FOR CONCRETE AND MASONRY
C. CONCRETE AND/OR MASONRY POST-INSTALLED ANCHORS
D. PRECAST CONCRETE COMPONENTS
E. CONCRETE FORMWORK FOR STRUCTURAL CONCRETE MEMBERS

120.2 SHOP DRAWINGS TO BE SUBMITTED SHALL PROVIDE COMPLETE INFORMATION FOR THE PRODUCTS OR COMPONENTS TO BE SUPPLIED. SUBMITTAL INFORMATION SHALL INCLUDE, BUT NOT BE LIMITED TO: MEMBER SIZES AND DIMENSIONS; GRADES OF MATERIAL FURNISHED; MATERIAL PREPARATION REQUIRED; MATERIAL FINISH AND MATERIAL COATINGS TO BE FURNISHED; INFORMATION REGARDING CUTS, COPES AND HOLES REQUIRED FOR OTHER TRADES; END CONNECTIONS; CAMBER AND OTHER DEVIATION FROM LINE; SPECIAL ERECTION AND/OR INSTALLATION PROCEDURES INCLUDING REQUIREMENTS FOR TEMPORARY STABILIZATION.

120.3 THE CONTRACTOR SHALL NOT DIRECTLY INCORPORATE THE STRUCTURAL DRAWINGS OR PORTIONS THEREOF INTO SHOP DRAWINGS OR ERECTION DRAWINGS TO BE SUBMITTED FOR THIS PROJECT WITHOUT THE EXPRESS PERMISSION OF ATLANTIC ENGINEERING SERVICES. SUBMITTED SHOP DRAWINGS WHICH CONTAIN COPIES OR REPRODUCTIONS OF ANY PORTION OF THE STRUCTURAL DRAWINGS WITHOUT THE EXPRESS WRITTEN PERMISSION OF ATLANTIC ENGINEERING SERVICES WILL BE RETURNED REJECTED. IF PERMISSION TO USE THE STRUCTURAL DRAWINGS IS GRANTED BY ATLANTIC ENGINEERING SERVICES, THE CONTRACTOR SHALL BE REQUIRED TO ENTER INTO A WRITTEN AGREEMENT WITH ATLANTIC ENGINEERING SERVICES AND TO PAY A SERVICE FEE TO USE THE STRUCTURAL DRAWINGS IN THE PREPARATION OF SHOP DRAWINGS.

120.4 THE CONTRACTOR SHALL SUBMIT PRINTED COPIES OF SHOP DRAWINGS FOR REVIEW BY ATLANTIC ENGINEERING SERVICES. PRINTED COPIES OF SHOP DRAWINGS SHALL CONSIST OF TWO (2) NON-REPRODUCIBLE PRINTS AND ONE (1) REPRODUCIBLE TRACING/SEPIA. UPON THE COMPLETION OF THE SHOP DRAWING REVIEW, ONE (1) PRINT AND ONE (1) TRACING/SEPIA SHALL BE RETURNED TO THE PROJECT ARCHITECT FOR DISTRIBUTION TO THE CONTRACTOR.

120.5 THE REVIEW OF SHOP DRAWINGS AND OTHER SUBMITTALS FOR THIS PROJECT IS FOR CONFORMANCE WITH THE DESIGN CONCEPT AND FOR GENERAL COMPLIANCE WITH THE INFORMATION CONTAINED IN THE CONTRACT DOCUMENTS. COMMENTS REGARDING THESE SUBMITTALS DO NOT RELIEVE THE CONTRACTOR FROM COMPLIANCE WITH THE CONTRACT DOCUMENTS. THE CONTRACTOR IS RESPONSIBLE FOR PERFORMING HIS WORK IN A SAFE AND SATISFACTORY MANNER.

### 200. FOUNDATIONS - GENERAL

200.1 FOUNDATIONS HAVE BEEN DESIGNED AND SHALL BE CONSTRUCTED IN ACCORDANCE WITH CRITERIA ESTABLISHED BY L.R. KIMBALL IN THEIR GEOTECHNICAL REPORT.

200.2 NO BACKFILLING AGAINST FOUNDATION WALLS SHALL BE PERMITTED UNTIL SUPPORTING STRUCTURAL ELEMENTS HAVE BEEN PLACED AND HAVE BECOME CAPABLE OF FURNISHING THE NECESSARY SUPPORT FOR THE WALLS. PROVIDE TEMPORARY SHORING WHERE REQUIRED. WHERE BACKFILL IS REQUIRED ON BOTH SIDES OF THE WALL, BACKFILL BOTH SIDES SIMULTANEOUSLY WITH A GRADE DIFFERENCE NOT TO EXCEED 2'-0" AT ANY TIME. CONTRACTOR SHALL USE EXTREME CAUTION DURING BACKFILLING TO PREVENT DAMAGE TO FOUNDATION WALLS. THE USE OF HEAVY EQUIPMENT FOR BACKFILLING IS NOT RECOMMENDED.

200.3 THE CONTRACTOR SHALL OBSERVE WATER CONDITIONS AT THE SITE AND TAKE THE NECESSARY PRECAUTIONS TO INSURE THAT THE FOUNDATION EXCAVATIONS REMAIN DRY DURING CONSTRUCTION. PROVIDE FOR DEWATERING AS NECESSARY.

200.4 THE CONTRACTOR SHALL USE EXTREME CAUTION DURING EXCAVATION. SUCH EXCAVATION SHALL BE PERFORMED IN SUCH A MANNER AS TO MAINTAIN THE STRUCTURAL INTEGRITY OF ALL EXISTING STRUCTURES TO REMAIN. PROVIDE TEMPORARY SHORING AS REQUIRED.

200.5 CONCRETE SLABS ON GRADE HAVE BEEN DESIGNED TO BEAR ON COMPACTED SUBGRADE SOILS OR PROPERLY COMPACTED FILL AS PER 200.1.

### 210. SHALLOW FOUNDATIONS

210.1 FOUNDATIONS HAVE BEEN DESIGNED AND SHALL BE CONSTRUCTED IN ACCORDANCE WITH CRITERIA ESTABLISHED IN THE GEOTECHNICAL REPORT PER 200.1.

210.2 SPREAD FOOTINGS HAVE BEEN DESIGNED TO BEAR ON UNDISTURBED SOILS OR PROPERLY COMPACTED FILL HAVING AN ALLOWABLE BEARING CAPACITY OF 2000 PSF, AS PER 200.1.

210.3 ELEVATIONS SHOWN ON THE DRAWINGS AT WHICH FOUNDATIONS ARE TO BEAR ARE APPROXIMATE. MATERIAL ON WHICH FOUNDATIONS ARE TO BEAR SHALL HAVE AT LEAST THE ABOVE NOTED CAPACITY. ALL EXTERIOR FOOTINGS SHALL BE A MINIMUM OF 3'-6" BELOW FINISHED GRADE.

210.4 THE OWNER/CONTRACTOR SHALL RETAIN THE SERVICES OF A PROFESSIONAL GEOTECHNICAL ENGINEER, SUBJECT TO THE APPROVAL OF THE ARCHITECT, TO INSPECT THE FOUNDATIONS, BEARING LEVELS, ETC., AND VERIFY THAT THE MATERIAL ON WHICH FOUNDATIONS BEAR HAS AT LEAST THE ABOVE NOTED CAPACITY AS PER 200.1.

### 300. REINFORCED CONCRETE

300.1 ALL REINFORCED CONCRETE WORK SHALL BE IN CONFORMANCE WITH THE "BUILDING CODE REQUIREMENTS FOR STRUCTURAL CONCRETE" (ACI 318, LATEST EDITION) AND SPECIFICATIONS FOR STRUCTURAL CONCRETE (ACI 301, LATEST EDITION) OF THE AMERICAN CONCRETE INSTITUTE.

300.2 MINIMUM DESIGN COMPRESSION STRENGTH (F'c) REQUIRED AT 28 DAYS:

A. FOUNDATIONS _____ 3000 PSI
B. WALLS _____ 4000 PSI
C. SLABS ON GRADE _____ 4000 PSI
D. COLUMNS, BEAMS, ELEVATED SLABS _____ 4000 PSI

300.3 MAXIMUM WATER TO CEMENTITIOUS MATERIALS RATIO:

A. FOUNDATIONS _____ 0.60
B. WALLS _____ 0.45
C. SLABS ON GRADE _____ 0.45
D. COLUMNS, BEAMS, ELEVATED SLABS _____ 0.45

300.4 ALL CONCRETE SHALL BE NORMAL WEIGHT CONCRETE (MINIMUM 144 PCF) WITH ALL CEMENT CONFORMING TO ASTM C150, TYPE I OR II. MAXIMUM AGGREGATE SIZE SHALL BE 1-1/2" FOR FOOTINGS AND 3/4" FOR WALLS AND SLABS, CONFORMING TO ASTM C33.

300.5 REINFORCEMENT

A. DEFORMED BARS _____ ASTM A615, GRADE 60
B. WELDED WIRE FABRIC _____ ASTM A185

300.6 MINIMUM COVER FOR CAST-IN-PLACE CONCRETE REINF., UNLESS OTHERWISE SHOWN ON DRAWINGS, SHALL BE AS FOLLOWS:

A. FOOTINGS & GRADE BEAMS _____ 3"
B. COLUMNS & PEDESTALS (OVER VERT. REINF.) _____ 2"
C. BEAMS (OVER MAIN REINF.) _____ 2"
D. SLABS CAST AGAINST EARTH _____ CENTERED
E. EXTERIOR WALLS _____ 2"
F. ELEVATED SLABS _____ 2"

300.7 SPLICES IN REINFORCEMENT, WHERE PERMITTED, SHALL BE AS FOLLOWS:

A. WELDED WIRE MESH _____ 8"
B. ALL OTHERS _____ CLASS "B" TENSION, CASE "1" MINIMUM, UNLESS OTHERWISE NOTED

300.8 CLASS "B", CASE "1" TENSION SPLICES IN INCHES, SHALL BE AS FOLLOWS:

| | 3000 PSI | | 4000 PSI | |
|---|---|---|---|---|
| SIZE | TOP BARS | ALL OTHERS | TOP BARS | ALL OTHERS |
| #3 (#10) | 28 | 22 | 24 | 19 |
| #4 (#13) | 37 | 29 | 32 | 25 |
| #5 (#16) | 47 | 36 | 40 | 31 |
| #6 (#19) | 56 | 43 | 48 | 37 |
| #7 (#22) | 81 | 63 | 70 | 54 |
| #8 (#25) | 93 | 72 | 80 | 62 |
| #9 (#29) | 105 | 81 | 91 | 70 |
| #10 (#32) | 118 | 91 | 102 | 79 |
| #11 (#36) | 131 | 101 | 113 | 87 |

300.9 SPLICES IN TOP REINFORCEMENT SHALL BE MADE AT MIDSPAN. SPLICES IN BOTTOM REINFORCEMENT SHALL BE OVER SUPPORTS UNLESS NOTED OTHERWISE.

300.10 TOP BARS IN BEAMS SHALL TERMINATE IN A CLASS "B" TENSION SPLICE OR HOOK AT DISCONTINUOUS END.

300.11 PARALLEL REINFORCEMENT PLACED IN TWO OR MORE LAYERS SHALL HAVE A CLEAR DISTANCE BETWEEN LAYERS OF 1". UPPER LAYER BARS SHALL BE PLACED DIRECTLY ABOVE BARS IN THE BOTTOM LAYER.

300.12 ALL REINFORCING SHALL BE HELD SECURELY IN POSITION WITH STANDARD ACCESSORIES DURING PLACEMENT OF CONCRETE. REINFORCING SUPPORTS FOR ALL EXPOSED CONCRETE SHALL BE GALVANIZED WITH PLASTIC COATED FEET (ALL WELDED WIRE MESH SHALL BE CHAIRED IN ACCORDANCE WITH THE 2001 FBC).

300.13 ALL TIES SHALL HAVE 135 DEGREE HOOKS.

300.14 PROVIDE 1/2" PREMOULDED EXPANSION MATERIAL WHERE SLAB ON GRADE IS POURED AROUND COLUMNS AND AGAINST WALLS UNLESS OTHERWISE SHOWN ON DRAWINGS.

300.15 CONTRACTION JOINTS FOR SLABS ON GRADE SHALL BE SPACED NO MORE THAN 16'-0" ON CENTER. PANELS FORMED BY JOINTS OR SLAB EDGES SHALL BE AS SQUARE AS POSSIBLE WITH A LENGTH-TO-WIDTH RATIO NOT TO EXCEED 1.5.

300.16 CONTRACTOR SHALL VERIFY DIMENSIONS AND LOCATIONS OF ALL SLOTS, PIPE SLEEVES, ETC., AS REQUIRED FOR MECHANICAL TRADES BEFORE CONCRETE IS PLACED.

300.17 PIPES OR CONDUITS PLACED IN SLABS SHALL NOT HAVE AN OUTSIDE DIAMETER LARGER THAN 1/3 THE SLAB THICKNESS AND SHALL NOT BE SPACED CLOSER THAN 3 DIAMETERS ON CENTERS. ALUMINUM CONDUITS SHALL NOT BE PLACED IN CONCRETE. NO CONDUITS SHALL BE PLACED IN SLAB WITHIN 12" OF COLUMN FACE OR FACE OF BEARING WALL. NO CONDUITS MAY BE PLACED IN EXTERIOR SLABS.

300.18 PRIOR TO PLACING CONCRETE, THE CONTRACTOR SHALL SUBMIT FOR REVIEW BY STRUCTURAL ENGINEER A CONCRETE POUR SCHEDULE SHOWING LOCATION OF ALL PROPOSED CONSTRUCTION JOINTS.

300.19 PRIOR TO CONCRETE PLACEMENT, THE CONTRACTOR SHALL SUBMIT A CONCRETE MIX DESIGN PREPARED IN ACCORDANCE WITH THE SPECIFICATIONS TO THE STRUCTURAL ENGINEER FOR REVIEW.

### 420. MASONRY

420.1 ALL MASONRY WORK SHALL BE IN CONFORMANCE WITH THE LATEST EDITION OF "BUILDING CODE REQUIREMENTS FOR MASONRY STRUCTURES" (ACI 530) AND THE "SPECIFICATIONS FOR MASONRY STRUCTURES" (ACI 530.1) OF THE AMERICAN CONCRETE INSTITUTE.

420.2 ALL MASONRY WORK TO BE EXECUTED IN COLD WEATHER SHALL BE IN CONFORMANCE WITH THE RECOMMENDATIONS FOR COLD WEATHER CONSTRUCTION OF THE LATEST EDITION OF "BUILDING CODE REQUIREMENTS FOR MASONRY STRUCTURES" (ACI 530) AND THE "SPECIFICATIONS FOR MASONRY STRUCTURES" (ACI 530.1) OF THE AMERICAN CONCRETE INSTITUTE WITH THE FOLLOWING ADDITION TO THE REQUIREMENTS OF ACI 530.1 SECTION 1.8-B: FOR ALL CONDITIONS WHEN TEMPERATURES FALL BELOW 40 DEGREES F, THE TEMPERATURE OF THE NEWLY LAID MASONRY OR NEWLY GROUTED MASONRY SHALL BE MAINTAINED ABOVE 32 DEGREES (F) FOR A MINIMUM OF 24 HOURS USING THE METHODS DESCRIBED IN ACI 530.1.

420.3 MORTAR SHALL CONFORM TO THE PROPORTION SPECIFICATION OF ASTM C270, TYPE M OR S. PROVIDE TYPE M MORTAR AT ALL HIGH STRENGTH MASONRY NOTED AS F'm = 2500 PSI OR GREATER. PROVIDE TYPE S MORTAR AT ALL STRUCTURAL MASONRY AND REINFORCED MASONRY UNLESS NOTED OTHERWISE.

420.4 GROUT SHALL CONFORM TO ASTM C476 AND AS FOLLOWS:

A. COMPRESSIVE STRENGTH (F'c) OF GROUT = 3,000 PSI MIN.
B. SLUMP OF GROUT SHALL BE 8 TO 11 INCHES AS MEASURED ACCORDING TO ASTM C143.
C. MAX. AGGREGATE SIZE SHALL BE 3/8" (AGGREGATE GRADED TO PRODUCE FINE GROUT IN CONFORMANCE WITH ASTM C476 AND C404).

420.5 LIMIT CEMENTITIOUS MATERIALS IN MORTAR TO: PORTLAND CEMENT CONFORMING TO ASTM C150 TYPE I; LIME CONFORMING TO ASTM C207; MORTAR CEMENT CONFORMING TO ASTM C1329 AND MASONRY CEMENT CONFORMING TO ASTM C91.

420.6 PROVIDE SOLID AND HOLLOW LOAD BEARING CONCRETE BLOCK UNITS PER ASTM C90, TYPE N-II, AS REQUIRED TO PROVIDE F'm AS NOTED BELOW.

420.7 MINIMUM 28-DAY ULTIMATE COMPRESSIVE STRENGTH OF MASONRY:

A. F'm _____ 1500 PSI

420.8 HORIZONTAL JOINT REINFORCING FOR ALL EXTERIOR AND LOAD BEARING WALLS SHALL BE GALVANIZED TRUSS OR LADDER TYPE DUR-O-WAL OR EQUIVALENT AS APPROVED BY THE ENGINEER WITH 2-9 GAGE LONGITUDINAL WIRE AND 9 GAGE CROSS WIRE, SPACED AT 16" CENTER TO CENTER, UNLESS NOTED OTHERWISE. PROVIDE ADDITIONAL LAYERS OF JOINT REINFORCEMENT IN THE FIRST TWO COURSES ABOVE AND BELOW A MASONRY OPENING. PROVIDE LAP AS RECOMMENDED BY MANUFACTURER WITH A MINIMUM OF 6". DISCONTINUE JOINT REINFORCING AT CONTROL JOINTS. PROVIDE "L" SHAPE AND "T" SHAPE DUR-O-WAL AT ALL INTERSECTION CORNERS WITH 8" MINIMUM LAP. SEE TYPICAL DETAILS.

420.9 FULL BED AND HEAD JOINTS SHALL BE USED.

420.10 REINFORCED MASONRY UNITS SHALL BE FILLED SOLID WITH 3000 PSI GROUT AT ALL CELLS CONTAINING REINFORCING AND WHERE SHOWN ON PLANS. GROUT ALL CELLS BELOW GRADE SOLID.

420.11 PROVIDE FINE GROUT PER ASTM C476 WHEN WIDTH OF GROUT SPACE IS LESS THAN 2". PROVIDE COARSE GROUT FOR GROUT SPACE WIDTHS 2" OR GREATER. PROVIDE FINE GROUT WHEN REINFORCING HAS LESS THAN 1/2" CLEARANCE.

420.12 PROVIDE CONTROL JOINTS IN MASONRY PER THE TYPICAL DETAILS. REFER TO ARCHITECTURAL DRAWINGS FOR CONTROL JOINT LOCATIONS. PROVIDE CONTROL JOINTS IN CONCRETE MASONRY BACKUP TO MATCH LOCATIONS IN MASONRY VENEER UNLESS NOTED OTHERWISE WHERE CONTROL JOINTS ARE NOT INDICATED ON THE ARCHITECTURAL DRAWINGS, CONTROL JOINTS SHALL BE LOCATED AT A MAXIMUM SPACING OF 24 FEET ON CENTER AND A MAXIMUM OF 10 FEET FROM CORNERS, AT MAJOR HEIGHT CHANGES, CHANGES IN WALL THICKNESS; AND AT WALL OPENINGS. THE CONTRACTOR SHALL SUBMIT THE PROPOSED CONTROL JOINT LAYOUT TO THE ARCHITECT FOR REVIEW AND APPROVAL.

420.13 PROVIDE CLEAN OUT AND INSPECTION HOLES AT BOTTOM OF MASONRY WALL IN ACCORDANCE WITH MASONRY CODE AT REINFORCING IF HIGH LIFT GROUTING (OVER 4 FEET HIGH) IS USED.

420.14 DEFORMED BAR REINFORCEMENT SHALL CONFORM TO ASTM A615, GRADE 60. PROVIDE LAP SPLICES OF 48 BAR DIAMETERS MINIMUM. PROVIDE BAR SPACERS AS REQUIRED TO PROPERLY LOCATE REINFORCING.

420.15 MASONRY COURSING SHOWN IN SECTION IS APPROXIMATE. REFER TO PLANS AND ELEVATIONS FOR ACTUAL COURSING. COORDINATE ACTUAL COURSING REQUIREMENTS WITH ARCHITECTURAL DRAWINGS.

### 510. STRUCTURAL STEEL

510.1 ALL STRUCTURAL STEEL WORK SHALL BE IN ACCORDANCE WITH THE "SPECIFICATION FOR STRUCTURAL STEEL BUILDINGS - ALLOWABLE STRESS DESIGN AND PLASTIC DESIGN" (1989 EDITION, AS REVISED) OF THE AISC.

510.2 ALL STRUCTURAL STEEL WORK SHALL BE IN ACCORDANCE WITH ANSI/AISC 360-05 - "SPECIFICATION FOR STRUCTURAL STEEL BUILDINGS."

510.3 GRADE OF STEEL

A. STRUCTURAL 'W' SHAPES _____ ASTM A992
B. STRUCTURAL 'M', 'S', 'HP' SHAPES _____ ASTM A572, GRADE 50
C. CHANNELS _____ ASTM A572, GRADE 50
D. STEEL TUBES (HSS SHAPES) _____ ASTM A500, GRADE B
E. STEEL PIPE (ROUND HSS) _____ ASTM A500, GRADE B
F. ANGLES AND PLATES _____ ASTM A36

510.4 GALVANIZED STRUCTURAL STEEL

A. STRUCTURAL SHAPES AND RODS _____ ASTM A123
B. BOLTS, FASTENERS AND HARDWARE _____ ASTM A153

510.5 ALL BOLTS SHALL BE ASTM A325, 3/4" DIAMETER, UNLESS OTHERWISE NOTED. WHERE NECESSARY DUE TO CONNECTION REQUIREMENTS PROVIDE BOLTS IN CONFORMANCE WITH ASTM A490. DO NOT MIX GRADES OF BOLTS OF THE SAME DIAMETER ON THE PROJECT.

510.6 ALL WELDING SHALL BE IN ACCORDANCE WITH THE STRUCTURAL WELDING CODE, AWS D1.1, LATEST EDITION, OF THE AMERICAN WELDING SOCIETY. ELECTRODES SHALL BE E70XX FOR MANUAL ARC WELDING AND F7X-EXXX FOR SUBMERGED ARC WELDING.

510.7 ALL BEAM TO COLUMN CONNECTIONS SHALL BE DESIGNED FOR THE SUMMATION OF THE FOLLOWING LOADS:

A. FOR ONE HALF THE UNIFORM LOAD CAPACITY OF THE MEMBER IN ACCORDANCE WITH AISC SPECIFICATIONS, BUT NOT LESS THAN 6 KIPS.
B. A 10.0 KIP AXIAL FORCE (ACTING IN TENSION AND COMPRESSION).
C. THE EFFECTS OF CONCENTRATED LOADS OCCURRING CLOSE TO THE ENDS OF THE BEAMS.

510.8 ALL NON-COMPOSITE BEAM END CONNECTIONS SHALL BE DESIGNED, UNLESS NOTED OTHERWISE, FOR AN END REACTION "R" EQUAL TO NOT LESS THAN ONE HALF THE UNIFORM LOAD CAPACITY OF THE MEMBER IN ACCORDANCE WITH AISC SPECIFICATIONS, BUT NOT LESS THAN 6 KIPS. THE EFFECTS OF CONCENTRATED LOADS OCCURRING CLOSE TO THE ENDS OF THE BEAMS SHALL BE CONSIDERED IN THE CONNECTION DESIGN.

510.9 CUTS, HOLES AND COPING, ETC. REQUIRED FOR OTHER TRADES SHALL BE SHOWN ON THE SHOP DRAWING AND MADE IN THE SHOP. CUTS OR BURNING OR HOLES IN STRUCTURAL STEEL IN THE FIELD WILL NOT BE PERMITTED.

510.10 ALTERNATE CONNECTION DETAILS MAY BE USED IF SUCH DETAILS ARE SUBMITTED TO THE ENGINEER FOR REVIEW AND APPROVAL. HOWEVER, THE ENGINEER SHALL BE THE SOLE JUDGE OF ACCEPTANCE AND THE CONTRACTOR'S BID SHALL ANTICIPATE THE USE OF THOSE SPECIFIED DETAILS SHOWN ON THE DRAWINGS THE CONTRACTOR IS RESPONSIBLE FOR THE DESIGN OF SUCH ALTERNATE DETAILS WHICH HE PROPOSES.

510.11 ALL STRUCTURAL STEEL FRAMES SHALL BE SECURELY BRACED UNTIL ALL FLOOR SLABS, ROOF DECKS AND SHEAR WALLS HAVE BEEN INSTALLED AND BECOME CAPABLE OF STABILIZING THE FRAMES.

510.12 BOLT AND WELD TESTING:

A. ALL SHOP AND FIELD BOLTS SHALL BE TESTED PER AISC REQUIREMENTS.
B. ALL WELDS SHOULD BE VISUALLY INSPECTED.
C. TEN PERCENT OF ALL WELDS AT BEAM AND GIRDER SHEAR CONNECTIONS SHALL BE RANDOMLY INSPECTED BY MAGNETIC PARTICLE METHOD, COMPLYING WITH ASTM E109, PERFORMED ON ROOT PASS AND ON FINISHED WELD.
D. ONE HUNDRED PERCENT OF FULL PENETRATION WELDS SHALL HAVE ULTRASONIC INSPECTION, COMPLYING WITH ASTM E164.
E. ONE HUNDRED PERCENT OF WELDS IN BEAM AND COLUMN MOMENT CONNECTIONS SHALL HAVE ULTRASONIC INSPECTION, COMPLYING WITH ASTM E164.

510.13 LEVELING GROUT SHALL BE NON-SHRINK, NON-METALLIC TYPE, FACTORY PRE-MIXED GROUT TESTED IN ACCORDANCE WITH CE-CRD-C621 OR ASTM C109, WITH f'c OF NOT LESS THAN 5000 PSI.

510.14 ALL ANCHOR BOLTS SHALL BE AND A MINIMUM DIAMETER UNLESS NOTED OTHERWISE.

### 535. STEEL PLATE FLOOR/STEEL GRATE FLOOR

535.1 ALL STEEL BAR GRATING SHALL BE CAPABLE OF SUPPORTING A 100 PSF SUPERIMPOSED LOAD AT THE INDICATED SPANS. THE DEFLECTION OF THE STEEL BAR GRATING UNDER THE ABOVE LOAD OR A 300 POUND CONCENTRATED LOAD AT MIDSPAN SHALL NOT EXCEED 1/360 OF THE SPAN IN INCHES OR 1/4", WHICHEVER IS LESS.

535.2 ALL METAL BAR GRATING SHALL COMPLY WITH NAAMM MBG 531; "METAL BAR GRATING MANUAL FOR STEEL, STAINLESS STEEL, AND ALUMINUM GRATINGS AND STAIR TREADS" FOR NON-HEAVY-DUTY METAL BAR GRATINGS OR NAAMM MBG 532, "HEAVY-DUTY METAL BAR GRATING MANUAL" FOR HEAVY-DUTY METAL BAR GRATING.

535.3 ALL STEEL BAR GRATING SHALL BE GW SERIES WITH 1-1/4" x 3/16" BEARING BARS AT 1-3/16" ON CENTER WITH CROSS BARS AT 4" ON CENTER AND SHALL BE CAPABLE OF SUPPORTING THE LOADS SPECIFIED IN GENERAL NOTE 535-1.

535.4 GRADE OF STEEL FOR STEEL FLOOR PLATE: ASTM A36 TYPICAL, OR ASTM A572 GRADE 50 AS NOTED.

535.5 ALL STEEL GRATING SHALL BE SECURELY FASTENED TO THE SUPPORTING STRUCTURE BY WELDING, BOLTING, OR CLIPS AND FASTENERS AT A SPACING NOT EXCEEDING 24" O.C.

535.6 FABRICATE THE STEEL GRATING TO BE REMOVABLE AND INSTALL WITH CLIPS AND FASTENERS AS RECOMMENDED BY THE MANUFACTURER FOR THE INSTALLATION CONDITIONS SHOWN.

535.7 STEEL GRATING MANUFACTURER SHALL SUBMIT SHOP DRAWINGS INDICATING AS A MINIMUM THE PROPOSED JOINT LOCATIONS, CONNECTION DETAILS, GRADE OF STEEL, AND FINISH.

535.8 ALL EXTERIOR STEEL BAR GRATING SHALL BE HOT DIP GALVANIZED.

### LEGEND

| | |
|---|---|
| | INDICATES NEW CONCRETE |
| | INDICATES GROUT IN SECTIONS |
| | INDICATES COMPACTED FILL OR BEARING STRATA PER GEO-TECHNICAL REPORT |
| | INDICATES GRANULAR FILL |
| | INDICATES STEP IN FOOTING SEE "TYPICAL DETAILS" |
| | INDICATES DIRECTION OF SPAN |
| | INDICATES NEW BEAM OR NEW CONSTRUCTION |
| WFn | INDICATES WALL FOOTING DESIGNATION SEE "CONTINUOUS WALL FOOTING SCHEDULE" |


Kimball
L. Robert Kimball & Associates
Architects and Engineers, Inc.
615 West Highland Ave.
Ebensburg, PA 15931
phone (814) 472-7700
fax (814) 472-7712
email aebldgs@lrkimball.com
web site www.lrkimball.com


CONSULTANTS


Atlantic Engineering Services
650 Smithfield Street • Suite 1200
Pittsburgh • Pennsylvania 15222
Phone: 412.338.9000 Fax: 412.338.0051
Email: pgh@aesp.com


PROFESSIONAL

COMMONWEALTH OF PENNSYLVANIA REGISTERED PROFESSIONAL ROBERT SERGIO BERTOCCHI ENGINEER

PROJECT NAME:

WESTMORELAND COUNTY COMMUNITY COLLEGE CLASS A BURN BUILDING

OWNER:

WESTMORELAND COUNTY COMMUNITY COLLEGE

YOUNGWOOD, PA 15697

KEYPLAN

| MARK | DATE | DESCRIPTION |
|---|---|---|

| | |
|---|---|
| ISSUE: | 05 / 02 / 07 |
| PROJECT NO: | 07-2200-0175 |
| CAD DWG FILE: | |
| DRAWN BY: | BJS |
| CHECKED BY: | RSB |


© L. Robert Kimball & Associates Architects and Engineers, Inc.


SHEET TITLE

GENERAL NOTES

S1.01


THIS DRAWING HAS BEEN PRODUCED ON ATLANTIC ENGINEERING SERVICES' CADD SYSTEM. ANY OTHER LETTERING, LINES OR SYMBOLS, OTHER THAN PROFESSIONAL STAMPS AND SIGNATURES, HAVE BEEN MADE WITHOUT THE AUTHORIZATION OF ATLANTIC ENGINEERING SERVICES AND ARE INVALID.


AES PROJECT #07-114 AES PLOT DATE: 04.30.07

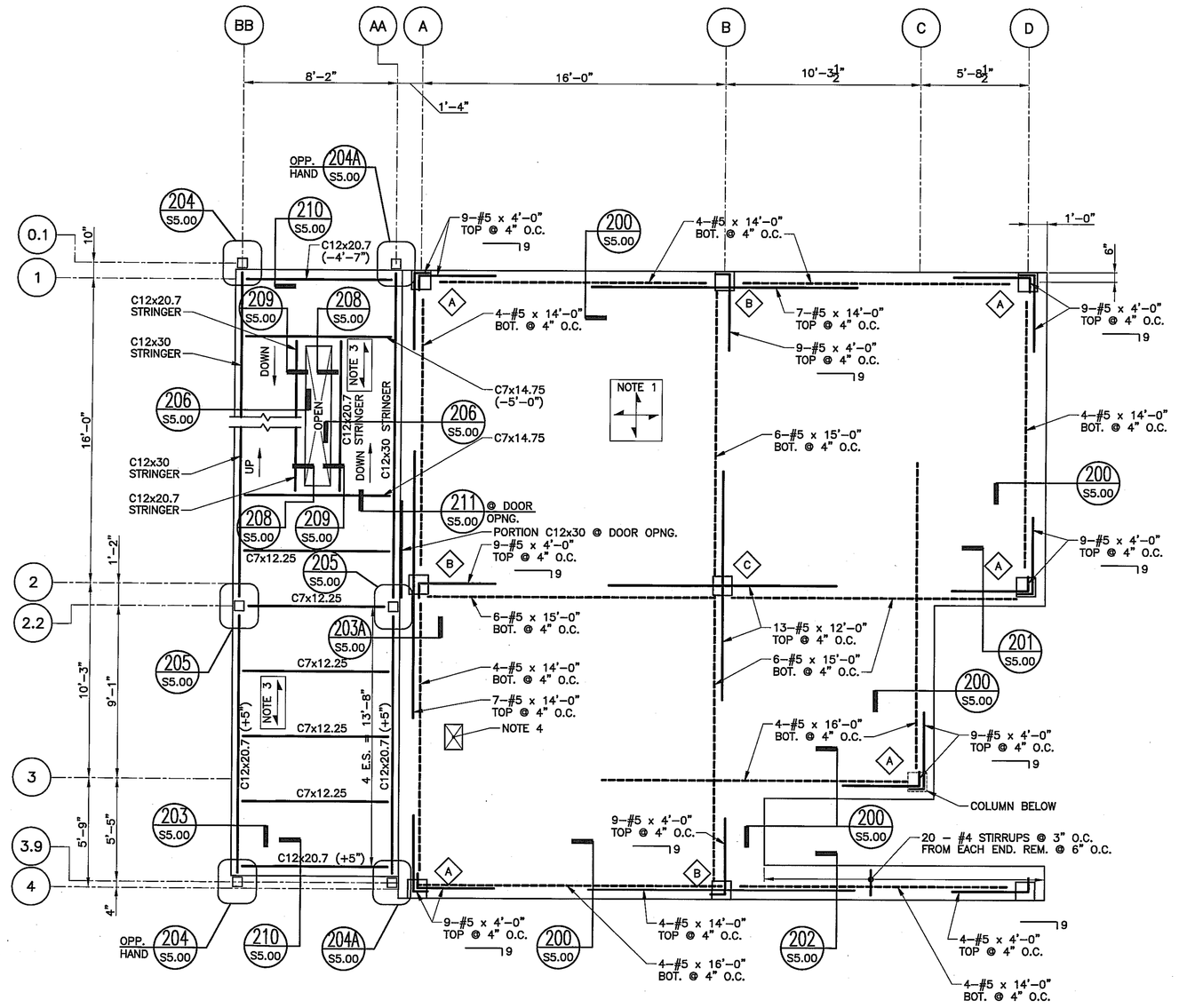


## SECOND FLOOR FRAMING PLAN

SCALE: $\frac{1}{4}$" = 1'-0"

NOTES:

1. 12" MIN. CONC. SLAB REINF. W/ #6 @ 12" O.C. TOP & B.E.W. SLAB THICKNESS VARIES FROM 12" MIN. TO 16" MAX. ELEV. B/SLAB = 9'-0" ELEV. T/SLAB = VARIES PER ARCH. DWGS. SEE PLAN FOR ADD'L SLAB REINF.
2. ELEV. T/STEEL = 110'-2$\frac{3}{8}$" TYP. UNLESS NOTED (±) FROM 110'-2$\frac{3}{8}$".
3. 1$\frac{1}{2}$"x$\frac{3}{8}$" GALV. BAR GRATE FLOORING W/ NOMINAL 4"x1" GRID PATTERN
4. SLAB OPNG. REINF. PER TYP. DETAILS
5. (A) – DENOTES SLAB SHEARHEAD LOCATION SEE S3.00 FOR DETAILS.
6. ALL CONC. MASONRY PARTITIONS TO BE 8" CONC. MASONRY REINF. W/ #5 @ 48" O.C. GROUT ALL CELLS W/ REINF. SOLID. ANCHOR WALLS TO SLAB W/ #4 DOWELS @ 48" O.C. COORD. WALL LOCATIONS W/ ARCH. DWGS. PROVIDE 8"x8" PRECAST LINTEL W/ 8" BRG. @ EACH END REINF. W/ 4-#4 LONG (2 TOP & 2 BOTTOM) & #3 STIRRUPS @ 6" O.C. @ ALL MASONRY PARTITION OPNGS. GREATER THAN 16" WIDE.
7. ALL EXTERIOR STEEL TO BE GALVANIZED.
8. ALL EXTERIOR STAIR CONNECTIONS TO BE BOLTED.

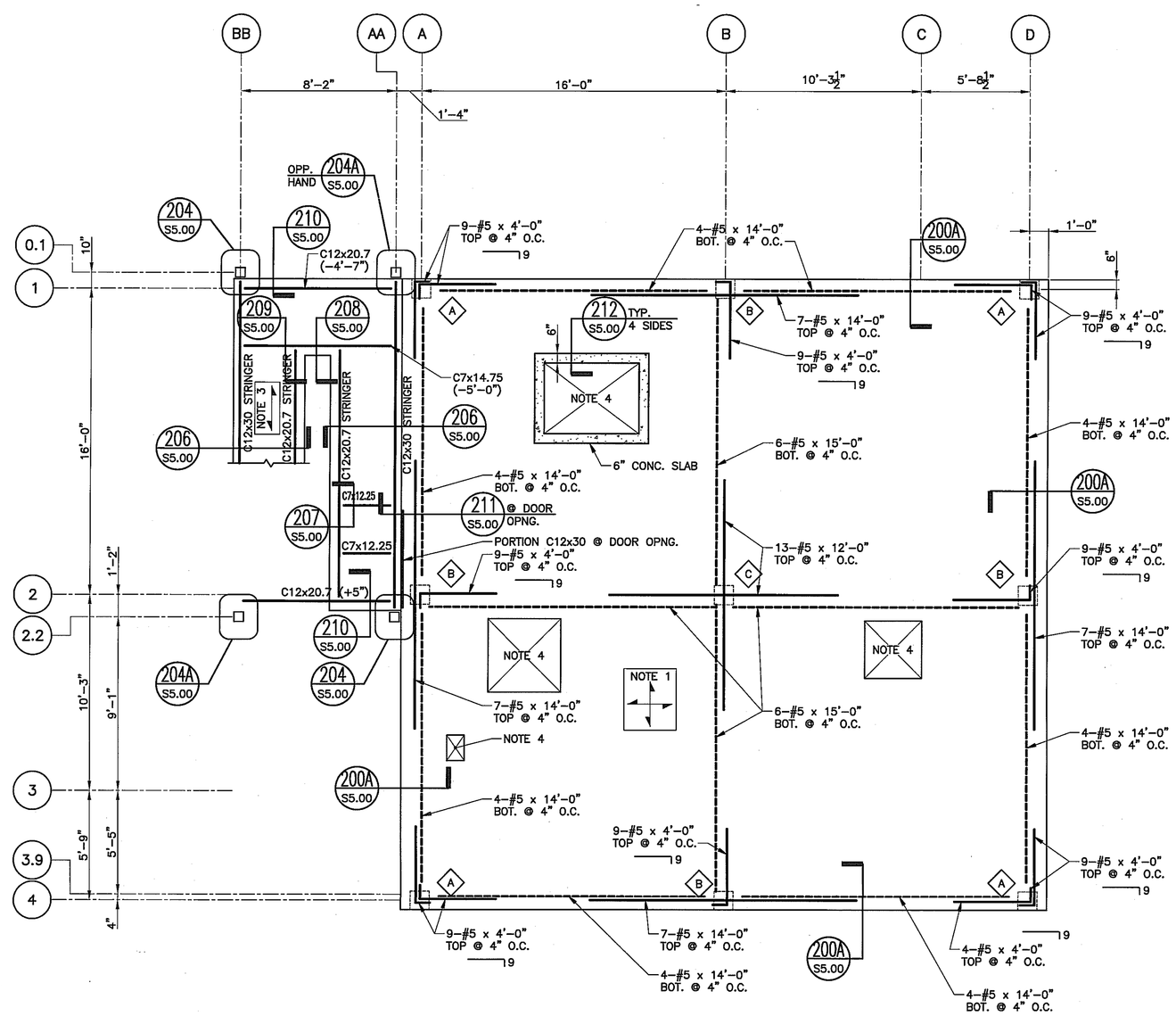


## ROOF FRAMING PLAN

SCALE: $\frac{1}{4}$" = 1'-0"

NOTES:

1. 12" MIN. CONC. SLAB REINF. W/ #6 @ 12" O.C. TOP & B.E.W. SLAB THICKNESS VARIES FROM 12" MIN. TO 16" MAX. ELEV. B/SLAB = 19'-0" ELEV. T/SLAB = VARIES PER ARCH. DWGS. SEE PLAN FOR ADD'L SLAB REINF.
2. ELEV. T/STEEL = 120'-2$\frac{3}{8}$" TYP. UNLESS NOTED (±) FROM 120'-2$\frac{3}{8}$".
3. 1$\frac{1}{2}$"x$\frac{3}{8}$" GALV. BAR GRATE FLOORING W/ NOMINAL 4"x1" GRID PATTERN
4. SLAB OPNG. REINF. PER TYP. DETAILS
5. (A) – DENOTES SLAB SHEARHEAD LOCATION SEE S3.00 FOR DETAILS.
6. ALL CONC. MASONRY PARTITIONS TO BE 8" CONC. MASONRY REINF. W/ #5 @ 48" O.C. GROUT ALL CELLS W/ REINF. SOLID. ANCHOR WALLS TO SLAB W/ #4 DOWELS @ 48" O.C. COORD. WALL LOCATIONS W/ ARCH. DWGS. PROVIDE 8"x8" PRECAST LINTEL W/ 8" BRG. @ EACH END REINF. W/ 4-#4 LONG (2 TOP & 2 BOTTOM) & #3 STIRRUPS @ 6" O.C. @ ALL MASONRY PARTITION OPNGS. GREATER THAN 16" WIDE.
7. ALL EXTERIOR STEEL TO BE GALVANIZED.
8. ALL EXTERIOR STAIR CONNECTIONS TO BE BOLTED.


Kimball
L. Robert Kimball & Associates
Architects and Engineers, Inc.
615 West Highland Ave.
Ebensburg, PA 15931
phone (814) 472-7700
fax (814) 472-7712
email aebldgs@lrkimball.com
web site www.lrkimball.com


CONSULTANTS


Atlantic Engineering Services
650 Smithfield Street • Suite 1200
Pittsburgh • Pennsylvania 15222
Phone: 412.338.9000 Fax: 412.338.0051
Email: pgh@aesgi.com


PROFESSIONAL

COMMONWEALTH OF PENNSYLVANIA REGISTERED PROFESSIONAL ROBERT SERGIO BERTOCCHI ENGINEER

PROJECT NAME:

# WESTMORELAND COUNTY COMMUNITY COLLEGE CLASS A BURN BUILDING

OWNER:

WESTMORELAND COUNTY COMMUNITY COLLEGE

YOUNGWOOD, PA 15697

KEYPLAN

| MARK | DATE | DESCRIPTION |
|---|---|---|

| | |
|---|---|
| ISSUE: | 05 / 02 / 07 |
| PROJECT NO: | 07-2200-0175 |
| CAD DWG FILE: | |
| DRAWN BY: | BJS |
| CHECKED BY: | RSB |

© L. Robert Kimball & Associates Architects and Engineers, Inc.

SHEET TITLE

SECOND FLOOR AND ROOF FRAMING PLAN

# S2.00

THIS DRAWING HAS BEEN PRODUCED ON ATLANTIC ENGINEERING SERVICES' CADD SYSTEM. ANY OTHER LETTERING, LINES OR SYMBOLS, OTHER THAN PROFESSIONAL STAMPS AND SIGNATURES, HAVE BEEN MADE WITHOUT THE AUTHORIZATION OF ATLANTIC ENGINEERING SERVICES AND ARE INVALID.

AES PROJECT #07-114 AES PLOT DATE: 04.30.07

## CONCRETE COLUMN SCHEDULE

| COLUMN MARK | | 1A | 1B | 1D | 2A | 2B | 2D | 3C | 4A | 4B | 4D |
|---|---|---|---|---|---|---|---|---|---|---|---|
| ROOF | | | | | | | | | | | |
| COL. SIZE (AxB) U.N.O. | | 12"x12" | 12"x12" | 12"x12" | 12"x12" | 12"x12" | 12"x12" | --- | 12"x12" | 12"x12" | 12"x12" |
| REINFORCING | VERTICAL | 8–#5 | 8–#5 | 8–#5 | 8–#5 | 8–#5 | 8–#5 | --- | 8–#5 | 8–#5 | 8–#5 |
| | TIES | #3@10" | #3@10" | #3@10" | #3@10" | #3@10" | #3@10" | --- | #3@10" | #3@10" | #3@10" |
| | MIN. LAP | 24" | 24" | 24" | 24" | 24" | 24" | --- | 24" | 24" | 24" |
| | COLUMN REINF. DETAIL | A | A | A | A | A | A | --- | A | A | A |
| SECOND FLOOR | | | | | | | | | | | |
| COL. SIZE (AxB) U.N.O. | | 12"x12" | 12"x12" | 12"x12" | 12"x12" | 12"x12" | 12"x12" | 12"x12" | 12"x12" | 12"x12" | 12"x12" |
| REINFORCING | VERTICAL | 8–#5 | 8–#5 | 8–#5 | 8–#5 | 8–#5 | 8–#5 | 8–#5 | 8–#5 | 8–#5 | 8–#5 |
| | TIES | #3@10" | #3@10" | #3@10" | #3@10" | #3@10" | #3@10" | #3@10" | #3@10" | #3@10" | #3@10" |
| | MIN. LAP | 24" | 24" | 24" | 24" | 24" | 24" | 24" | 24" | 24" | 24" |
| | COLUMN REINF. DETAIL | A | A | A | A | A | A | A | A | A | A |
| SLAB | | | | | | | | | | | |
| COL. SIZE (AxB) U.N.O. | | 12"x12" | 12"x12" | 12"x12" | 12"x12" | 12"x12" | 12"x12" | 12"x12" | 12"x12" | 12"x12" | 12"x12" |
| REINFORCING | VERTICAL | 8–#5 | 8–#5 | 8–#5 | 8–#5 | 8–#5 | 8–#5 | 8–#5 | 8–#5 | 8–#5 | 8–#5 |
| | TIES | #3@10" | #3@10" | #3@10" | #3@10" | #3@10" | #3@10" | #3@10" | #3@10" | #3@10" | #3@10" |
| | MIN. LAP | 24" | 24" | 24" | 24" | 24" | 24" | 24" | 24" | 24" | 24" |
| | COLUMN REINF. DETAIL | A | A | A | A | A | A | A | A | A | A |
| FOOTINGS | LOAD TO FDN (KIPS) | 54 | 144 | 54 | 144 | 267 | 144 | 41 | 54 | 144 | 54 |
| | DOWELS TO FDN (KIPS) | 4–#5 | 4–#5 | 4–#5 | 4–#5 | 4–#5 | 4–#5 | 4–#5 | 4–#5 | 4–#5 | 4–#5 |
| | SIZE (AxBxD) | 7'–0"x7'–0" x1'–6" | 9'–0"x9'–0" x1'–6" | 5'–6"x5'–6" x1'–0" | 10'–6"x10'–6" x2'–0" | 12'–6"x12'–6" x2'–0" | 9'–0"x9'–0" x1'–6" | 5'–0"x5'–0" x1'–0" | 6'–0"x6'–0" x1'–0" | 9'–0"x9'–0" x1'–6" | 5'–6"x5'–6" x1'–0" |
| | REINFORCING (B.E.W.) | 7–#6 | 9–#6 | 6–#5 | 11–#7 | 12–#8 | 9–#6 | 5–#5 | 6–#5 | 9–#6 | 6–#5 |
| | ELEVATION TOP | –2'–0" | –2'–0" | –2'–6" | –1'–6" | –1'–6" | –2'–0" | –2'–6" | –2'–6" | –2'–0" | –2'–6" |
| REMARKS | | | | | | | | | | | |

## COLUMN SCHEDULE

| COLUMN MARK | | 0.1 BB | 0.1 AA | 2.2 BB | 2.2 AA | 3.9 BB | 3.9 AA |
|---|---|---|---|---|---|---|---|
| ROOF | | | | | | | |
| SECOND | | HSS8x8x$\frac{5}{8}$ | HSS8x8x$\frac{5}{8}$ | HSS8x8x$\frac{5}{8}$ | HSS8x8x$\frac{5}{8}$ | | |
| SLAB | | | | | | HSS8x8x$\frac{5}{8}$ | HSS8x8x$\frac{5}{8}$ |
| ELEVATION BOT./B℄ | | +0'–8" | +0'–8" | +0'–8" | +0'–8" | +0'–8" | +0'–8" |
| LOAD TO B℄ (KIPS) | | 17 | 17 | 23 | 23 | 5 | 5 |
| B℄ SIZE (txaxb) | | $\frac{3}{4}$x14x14 | $\frac{3}{4}$x14x14 | $\frac{3}{4}$x14x14 | $\frac{3}{4}$x14x14 | $\frac{3}{4}$x14x14 | $\frac{3}{4}$x14x14 |
| FOOTINGS | SIZE (AxBxD) | 3'–0"x3'–0" x1'–0" | | 3'–6"x3'–6" x1'–0" | | 3'–0"x3'–0" x1'–0" | |
| | REINFORCING (B.E.W.) | 4–#5 | SEE COL. 1A | 4–#5 | SEE COL. 2A | 4–#5 | SEE COL. 4A |
| | ELEVATION TOP | –2'–6" | | –2'–6" | | –2'–6" | |
| PIERS | SIZE (MxN) (IN.) | 18"x18" | 18"x18" | 18"x18" | 18"x18" | 18"x18" | 18"x18" |
| | REINFORCING (VERT.) | 8–#6 | 8–#6 | 8–#6 | 8–#6 | 8–#6 | 8–#6 |
| | REINFORCING (TIES) | #3@12" | #3@12" | #3@12" | #3@12" | #3@12" | #3@12" |
| | ELEVATION TOP | +0'–6" | +0'–6" | +0'–6" | +0'–6" | +0'–6" | +0'–6" |
| | DETAIL | A | A | A | A | A | A |
| COLUMN BASE DETAIL | | 1 | 1 | 1 | 1 | 1 | 1 |
| REMARKS | | | | | | | |

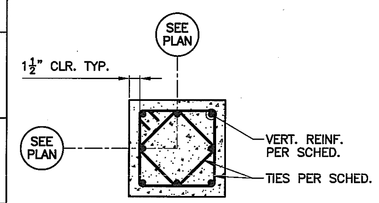


COLUMN REINFORCING DETAIL "A"

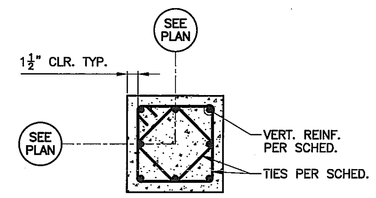


PIER REINFORCING DETAIL "A"

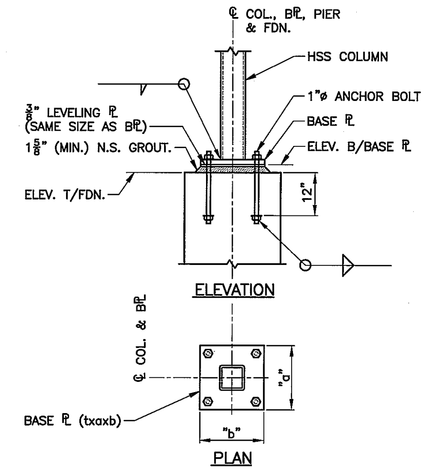


TYPICAL COLUMN BASE DETAIL "1"

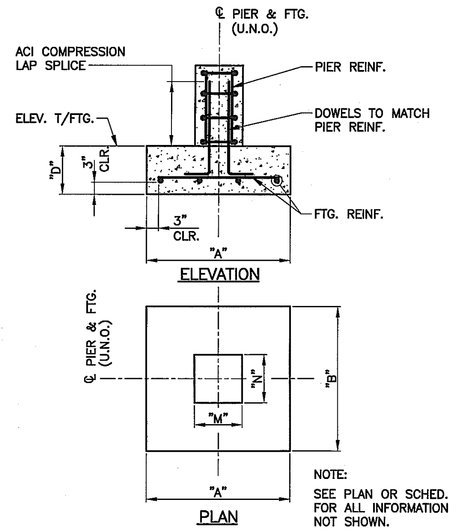


TYPICAL SPREAD FOOTING DETAIL

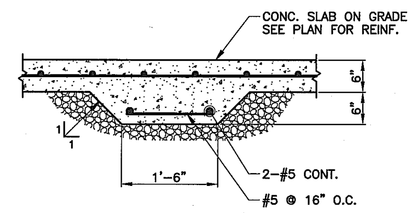


TYPICAL THICKENED CONCRETE SLAB ON GRADE AT CONCRETE MASONRY PARTITIONS DETAIL

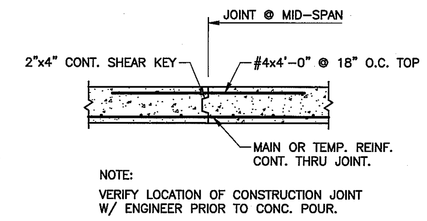


TYPICAL CONSTRUCTION JOINT AT FRAMED SLAB DETAIL

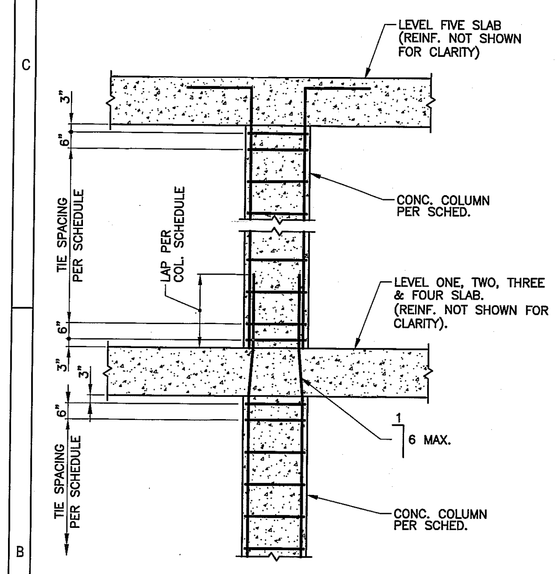


TYPICAL CONCRETE COLUMN DETAIL

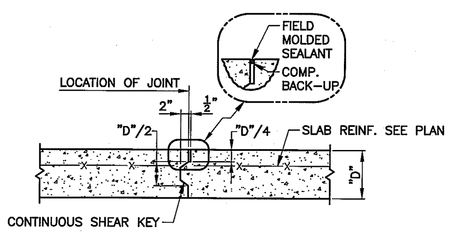


NOTE:
IF CONSTRUCTION JOINTS ARE NOT SHOWN ON PLAN CONTRACTOR IS TO PROVIDE CONSTRUCTION JOINT PLAN TO LIMIT AREAS TO APPROX. 300 SQ. FEET, MAX. RECOMMENDED PANEL LENGTH RATIO (1.5:1), SUBJECT TO ARCHITECTS REVIEW.

TYPICAL CONSTRUCTION JOINT IN SLAB ON GRADE DETAIL

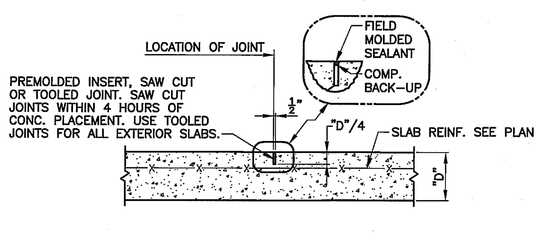


NOTE:
IF CONTRACTION JOINTS ARE NOT SHOWN ON PLAN CONTRACTOR IS TO PROVIDE CONTRACTION JOINT PLAN TO LIMIT AREAS TO APPROX. 300 SQ. FEET, MAX. RECOMMENDED PANEL LENGTH RATIO (1.5:1), SUBJECT TO ARCHITECTS REVIEW.

TYPICAL CONTRACTION JOINT IN SLAB ON GRADE DETAIL

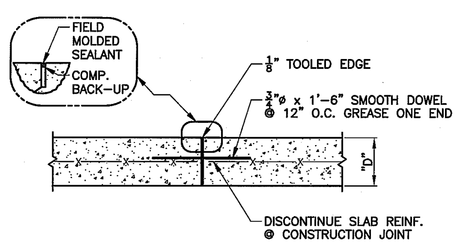


TYPICAL CONSTRUCTION JOINT IN SLAB ON GRADE DETAIL

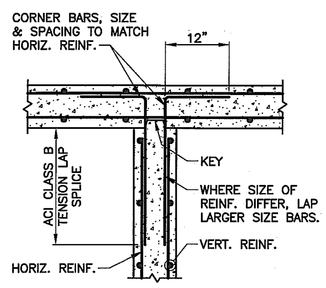


PLAN VIEW

TYPICAL CONCRETE WALL INTERSECTION DETAIL

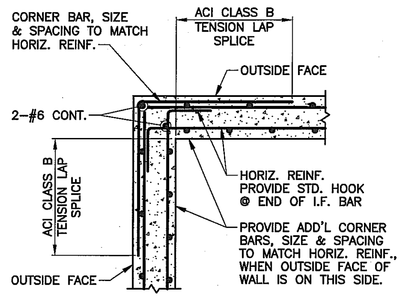


PLAN VIEW

TYPICAL CONCRETE WALL CORNER DETAIL

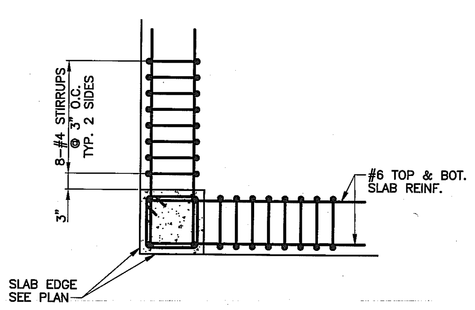


SHEARHEAD REINFORCING DETAIL (A)

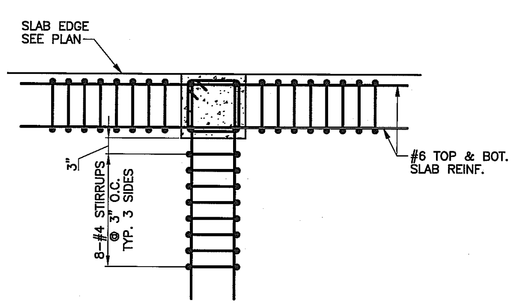


SHEARHEAD REINFORCING DETAIL (B)

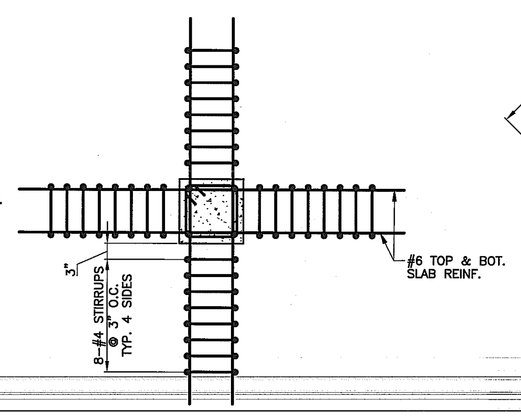


SHEARHEAD REINFORCING DETAIL (C)

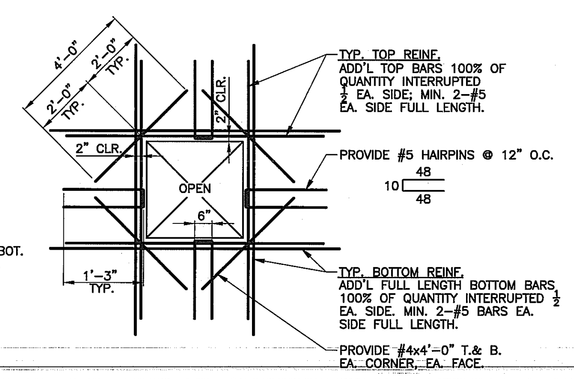


TYPICAL FLAT SLAB OPENING REINFORCING DETAIL

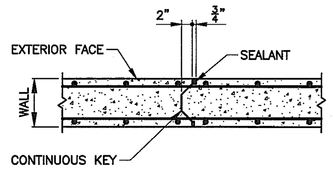


PLAN VIEW

TYPICAL CONSTRUCTION JOINT IN CONCRETE WALL DETAIL

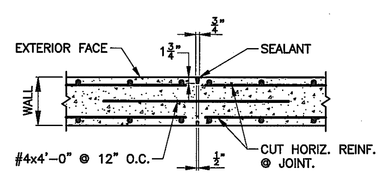


PLAN VIEW

TYPICAL CONTRACTION JOINT IN CONCRETE WALL DETAIL

THIS DRAWING HAS BEEN PRODUCED ON ATLANTIC ENGINEERING SERVICES' CADD SYSTEM. ANY OTHER LETTERING, LINES OR SYMBOLS, OTHER THAN PROFESSIONAL STAMPS AND SIGNATURES, HAVE BEEN MADE WITHOUT THE AUTHORIZATION OF ATLANTIC ENGINEERING SERVICES AND ARE INVALID.

AES PROJECT #07–114 AES PLOT DATE: 04.30.07

Kimball
L. Robert Kimball & Associates
Architects and Engineers, Inc.
615 West Highland Ave.
Ebensburg, PA 15931
phone (814) 472–7700
fax (814) 472–7712
email aebldgs@lrkimball.com
web site www.lrkimball.com

CONSULTANTS

Atlantic Engineering Services
650 Smithfield Street • Suite 1200
Pittsburgh • Pennsylvania 15222
Phone: 412.338.9000 Fax: 412.338.0051
Email: pgh@aesnj.com

PROFESSIONAL

COMMONWEALTH OF PENNSYLVANIA REGISTERED PROFESSIONAL ENGINEER ROBERT SERGIO BERTOCCHI

PROJECT NAME:

# WESTMORELAND COUNTY COMMUNITY COLLEGE CLASS A BURN BUILDING

OWNER:

WESTMORELAND COUNTY COMMUNITY COLLEGE

YOUNGWOOD, PA 15697

KEYPLAN

| MARK | DATE | DESCRIPTION |
|---|---|---|
| | | |

| | |
|---|---|
| ISSUE: | 05 / 02 / 07 |
| PROJECT NO: | 07-2200-0175 |
| CAD DWG FILE: | |
| DRAWN BY: | BJS |
| CHECKED BY: | RSB |

© L. Robert Kimball & Associates Architects and Engineers, Inc.

SHEET TITLE

COLUMN SCHEDULE AND TYPICAL DETAILS

S3.00

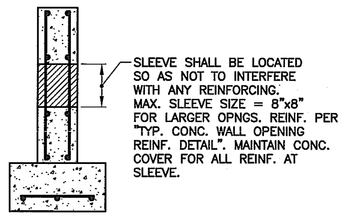


TYPICAL SLEEVE THROUGH CONCRETE WALL DETAIL

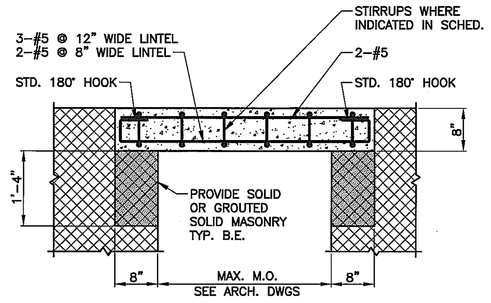


NOTES:

1. SEE ARCH. DWGS. FOR LOCATION AND ELEVATION OF BOTTOM OF P.C. LINTELS.
2. ALL REINF. SHOWN IS EPOXY COATED. ANY METAL INSERTS, CHAIRS, TIES, ETC. REQ'D BY THE CONTRACTOR FOR FABRICATION OR ERECTION SHALL BE EPOXY COATED OR STAINLESS STEEL.
3. $1\frac{1}{2}$" COVER TYPICAL.
4. PROVIDE GROUT LEVELING BED FOR P.C. LINTEL BRG. HOLD GROUT BACK 2" FROM EDGE OF MASONRY.
5. MAX. MASONRY OPENING PER LINTEL SCHEDULE.

TYPICAL PRECAST CONCRETE LINTEL DETAIL

## SCHEDULE OF REINFORCING BAR EMBEDMENT & SPLICE LENGTH

| BAR SIZE | TENSION | | | | COMPRESSION | | | |
|---|---|---|---|---|---|---|---|---|
| | * LTE EMBEDMENT LENGTH | | * LTS LAP SPLICE LENGTH | | * LCE EMBEDMENT LENGTH | | * LCS LAP SPLICE LENGTH | |
| | TOP BARS | OTHER | TOP BARS | OTHER | f'c 4000 | f'c 6000 | f'c 4000 | f'c 6000 |
| #3 | 14" | 12" | 18" | 16" | 8" | 8" | 12" | 12" |
| #4 | 18" | 14" | 23" | 18" | 11" | 9" | 15" | 15" |
| #5 | 23" | 18" | 27" | 23" | 14" | 12" | 19" | 19" |
| #6 | 28" | 21" | 35" | 27" | 17" | 14" | 23" | 23" |
| #7 | 32" | 25" | 42" | 32" | 19" | 16" | 26" | 26" |
| #8 | 39" | 30" | 51" | 39" | 22" | 18" | 30" | 30" |
| #9 | 49" | 38" | 64" | 50" | 25" | 20" | 24" | 24" |
| #10 | 62" | 48" | 81" | 63" | 28" | 23" | 38" | 38" |
| #11 | 76" | 59" | 100" | 77" | 31" | 25" | 42" | 42" |
| | * LTE | | * LTS | | * LCE | | * LCS | |

NOTES:

1. THE ABOVE SCHEDULE INCLUDES SPLICE & EMBEDMENT LENGTHS WHICH SATISFY THE FOLLOWING CRITERIA:
   a. f'c = 4000 PSI (OR 6000 PSI AS NOTED)
   b. fy = 60000 PSI
   c. CONCRETE WEIGHT = 150 PCF
   d. O.C. BAR SPACING = GREATER THAN 4 TIMES BAR DIAMETER
   e. CLEAR COVER = GREATER THAN 2 TIMES BAR DIAMETER FOR WALLS & SLABS
      CLEAR COVER = GREATER THAN THE BAR DIAMETER FOR BEAMS & COLUMNS
   f. BEAM & COLUMN REINF. ENCLOSED BY TIES & STIRRUP PER ACI
2. IF ANY OF THE FOLLOWING CONDITIONS APPLY THE ABOVE SCHEDULED LENGTHS SHALL BE MODIFIED AS FOLLOWS:
   a. IF CLEAR COVER IS LESS THAN BAR DIAMETER; MULTIPLY SCHEDULE LENGTH BY 2.0
   b. IF O.C. BAR SPACING IS LESS THAN 4 TIMES BAR DIAMETER; MULTIPLY SCHEDULE LENGTH BY 2.0
   c. ALL EPOXY COATED BARS; TOP BARS : MULTIPLY SCHEDULE LENGTH BY 1.3 OTHER BARS : MULTIPLY SCHEDULE LENGTH BY 1.5
   d. FOR LIGHTWEIGHT CONCRETE; MULTIPLY SCHEDULE LENGTH BY 1.3
3. SPLICES MADE W. MECHANICAL CONNECTORS CAN BE USED AT CONTRACTORS OPTION & SHALL DEVELOP 125 PERCENT OF SPECIFIED YIELD STRENGTH OF BAR

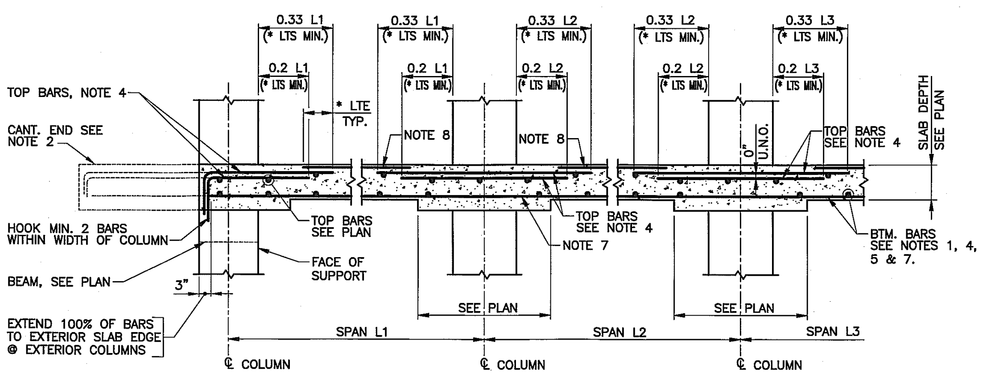


COLUMN STRIP

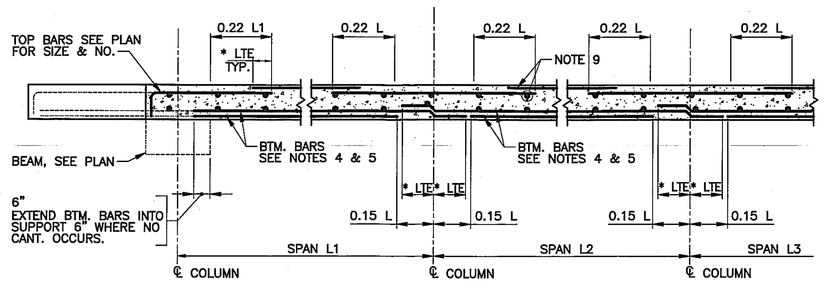


MIDDLE STRIP

## STRUCTURAL ABBREVIATIONS:

& — AND
A.A. — AFTER ALIGNMENT
A.B. — ANCHOR BOLT
ADD'L — ADDITIONAL
ADJ. — ADJACENT
A.F.F. — ABOVE FINISH FLOOR
ALT. — ALTERNATE
ALUM. — ALUMINUM
APPROX. — APPROXIMATELY
ARCH. — ARCHITECT(URAL)
@ — AT

B.BM. — BOND BEAM
B.E. — BOTH ENDS
B.E.W. — BOTTOM EACH WAY
BET. — BETWEEN
B/ — BOTTOM OF
BLDG. — BUILDING
BM. — BEAM
BOT./BTM. — BOTTOM
BP. — BASE/BEARING PLATE
BRDG. — BRIDGING
BRG. — BEARING
B.S. — BOTH SIDES
BT. — BENT

C.I.P. — CAST IN PLACE
C.J. — CONSTRUCTION JOINT /CONTRACTION JOINT
CA — CAISSON
CANT. — CANTILEVER
℄ — CENTER LINE
CLR. — CLEAR
COL. — COLUMN
COMP. — COMPOSITE OR COMPRESSIBLE
CONC. — CONCRETE
CONN. — CONNECTION
CONSTR. — CONSTRUCTION
CONT. — CONTINUOUS
CONTR. — CONTRACTOR
COORD. — COORDINATE

D.L. — DEAD LOAD
DBA — DEFORMED BAR ANCHOR
DBL. — DOUBLE
DET. — DETAIL
DIA./ø — DIAMETER
DIAG. — DIAGONAL
DIM. — DIMENSIONS
DWG. — DRAWING
DWL. — DOWEL

EA. — EACH
E.E. — EACH END
E.F. — EACH FACE
E.O.D. — EDGE OF DECK
E.O.R. — ENGINEER OF RECORD
E.O.S. — EDGE OF SLAB
E.W. — EACH WAY
ELEV. — ELEVATION/ELEVATOR
ELEV. B/ — ELEVATION BOTTOM OF
ELEV. T/ — ELEVATION TOP OF
EMBED. — EMBEDMENT/EMBEDDED
ENGR. — ENGINEER
EQ. — EQUAL
EQ. SPA. — EQUAL SPACES
EQUIP. — EQUIPMENT
EQUIV. — EQUIVALENT
E.S. — EACH SIDE/EQUAL SPACES
ETC. — ETCETERA
EXP. JT. — EXPANSION JOINT
EXT. — EXTERIOR/EXTENDED
EX. — EXISTING
EXIST. — EXISTING
EXP. — EXPANSION

FAB. — FABRICATOR
F.F. — FAR FACE
FDN. — FOUNDATION
FIN. — FINISH
F.O.S. — FACE OF STUD
F.O.W. — FACE OF WALL
F.R.T. — FIRE RETARDANT TREATED
FTG. — FOOTING
FT. — FOOT

GB — GRADE BEAM
G.C. — GENERAL CONTRACTOR
GA. — GAGE
GALV. — GALVANIZED
GEN. — GENERAL

H.O.F. — HORIZONTAL OUTSIDE FACE
H.I.F. — HORIZONTAL INSIDE FACE
H.E.F. — HORIZONTAL EACH FACE
HORIZ. — HORIZONTAL
HSS — HOLLOW STRUCTURAL SECTION

I.D. — INSIDE DIAMETER
I.F. — INSIDE FACE
IN. — INCH(ES)
INT. — INTERIOR

JST. — JOIST
JT. — JOINT

K — KIPS
K.FT. — KIP FEET
KLF — KIPS PER LINEAR FOOT
K.O. — KNOCKOUT
KSF — KIPS PER SQUARE FOOT
KSI — KIPS PER SQUARE INCH

LBS. — POUNDS
L.E. — LEFT END
L.L. — LIVE LOAD
LLH — LONG LEG HORIZONTAL
LLV — LONG LEG VERTICAL
LLBB — LONG LEG BACK TO BACK
LONG. — LONGITUDINAL
LT. — LIGHT
L.W. — LIGHT WEIGHT
L — ANGLE
⅃L — DOUBLE ANGLE
⅃⅃L — TRIPLE ANGLE

MAS. — MASONRY
MAT'L — MATERIAL
MAX. — MAXIMUM
MECH. — MECHANICAL
MEZZ. — MEZZANINE
MFR.(G) — MANUFACTURER(ING)
MIN. — MINIMUM
MISC. — MISCELLANEOUS
M.O. — MASONRY OPENING

N.F. — NEAR FACE
N.S. — NEAR SIDE/NON-SHRINK
N.I.C. — NOT IN CONTRACT
NO./# — NUMBER
N.T.S. — NOT TO SCALE
N.W. — NORMAL WEIGHT

O.C. — ON CENTER
O.D. — OUTSIDE DIAMETER
O.F. — OUTSIDE FACE
OPNG. — OPENING
OPP. — OPPOSITE

PAR. — PARALLEL
P.C. — PRECAST CONCRETE
PERP. — PERPENDICULAR
P.E.M.B. — PRE-ENGINEERED METAL BUILDING
PL — PLATE
PLF — POUNDS PER LINEAR FOOT
PREFAB. — PREFABRICATED
PSF — POUNDS PER SQUARE FOOT
PSI — POUNDS PER SQUARE INCH
P.T. — PRESSURE TREATED
P-TEN. — POST-TENSION(ED)(ING)

R/RAD. — RADIUS
R.E. — RIGHT END
REINF. — REINFORCED
REF. — REFERENCE
REM. — REMAINDER
REQ'D — REQUIRED
REQ'MTS — REQUIREMENTS
RET. — RETAINING
REV. — REVISION

SCHED. — SCHEDULE
SECT. — SECTION
SIM. — SIMILAR
SLH — SHORT LEG HORIZONTAL
SLV — SHORT LEG VERTICAL
S.O.G. — SLAB ON GRADE
SPA. — SPACE(S)(ING)
SPEC. — SPECIFICATION
SPD. — SPREAD
SP.L. — SPLICE LENGTH
SQ. — SQUARE
SQ. FT. — SQUARE FEET
SQ. IN. — SQUARE INCH
STD. — STANDARD
STIFF. — STIFFENER
STL. — STEEL
STRUCT. — STRUCTURAL
SYM. — SYMMETRICAL

T. — TOP
T/ — TOP OF
TEMP. — TEMPORARY
TRANS. — TRANSVERSE
TYP. — TYPICAL

U/S — UNDERSIDE
U.N.O. — UNLESS NOTED OTHERWISE

V.I.F. — VERIFY IN FIELD OR VERTICAL INSIDE FACE
VERT. — VERTICAL
V.E.F. — VERTICAL EACH FACE
V.O.F. — VERTICAL OUTSIDE FACE

W/ — WITH
W/O — WITHOUT
W.P. — WORK POINT
WT. — WEIGHT
W.W.F. — WELDED WIRE FABRIC


Kimball
L. Robert Kimball & Associates
Architects and Engineers, Inc.
615 West Highland Ave.
Ebensburg, PA 15931
phone (814) 472–7700
fax (814) 472–7712
email aeblds@lrkimball.com
web site www.lrkimball.com


CONSULTANTS


Atlantic Engineering Services
650 Smithfield Street • Suite 1200
Pittsburgh • Pennsylvania 15222
Phone: 412.338.9000 Fax: 412.338.0051
Email: pgh@aesp.com


PROFESSIONAL

COMMONWEALTH OF PENNSYLVANIA REGISTERED PROFESSIONAL ROBERT SERGIO BERTOCCHI ENGINEER

PROJECT NAME:

WESTMORELAND COUNTY COMMUNITY COLLEGE CLASS A BURN BUILDING

OWNER:

WESTMORELAND COUNTY COMMUNITY COLLEGE

YOUNGWOOD, PA 15697

KEYPLAN

| MARK | DATE | DESCRIPTION |
|---|---|---|

ISSUE: 05 / 02 / 07
PROJECT NO: 07-2200-0175
CAD DWG FILE:
DRAWN BY: BJS
CHECKED BY: RSB

© L. Robert Kimball & Associates Architects and Engineers, Inc.

SHEET TITLE

TYPICAL DETAILS

S3.01

THIS DRAWING HAS BEEN PRODUCED ON ATLANTIC ENGINEERING SERVICES' CADD SYSTEM. ANY OTHER LETTERING, LINES OR SYMBOLS, OTHER THAN PROFESSIONAL STAMPS AND SIGNATURES, HAVE BEEN MADE WITHOUT THE AUTHORIZATION OF ATLANTIC ENGINEERING SERVICES AND ARE INVALID.

AES PROJECT #07–114 AES PLOT DATE: 04.30.07

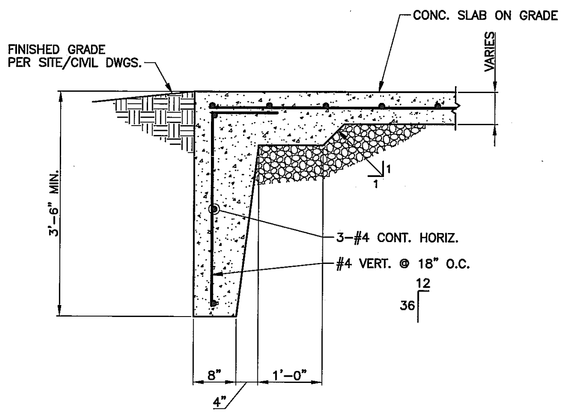


SECTION 100 S4.00
SCALE: 3/4" = 1'-0"

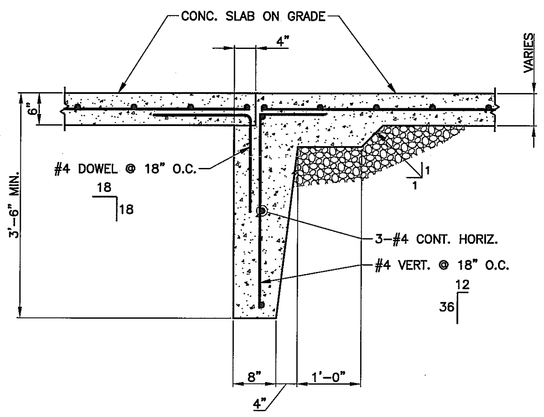


SECTION 101 S4.00
SCALE: 3/4" = 1'-0"

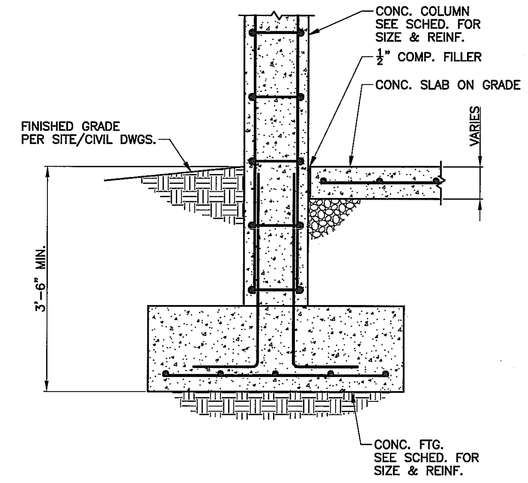


SECTION 102 S4.00
SCALE: 3/4" = 1'-0"

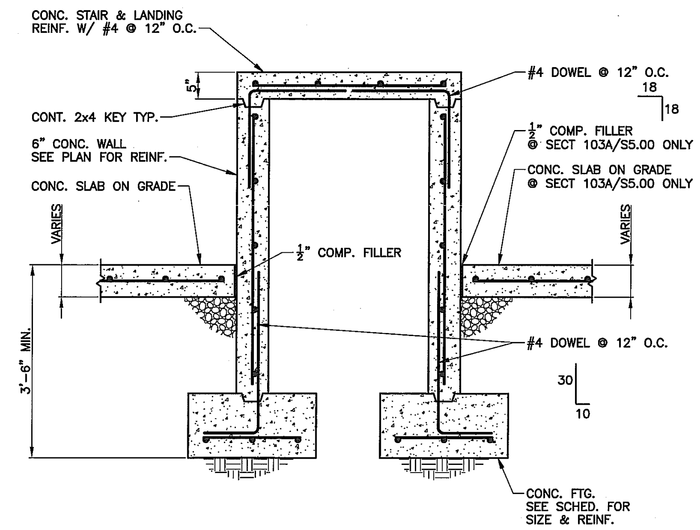


SECTION 103 S4.00
SCALE: 3/4" = 1'-0"

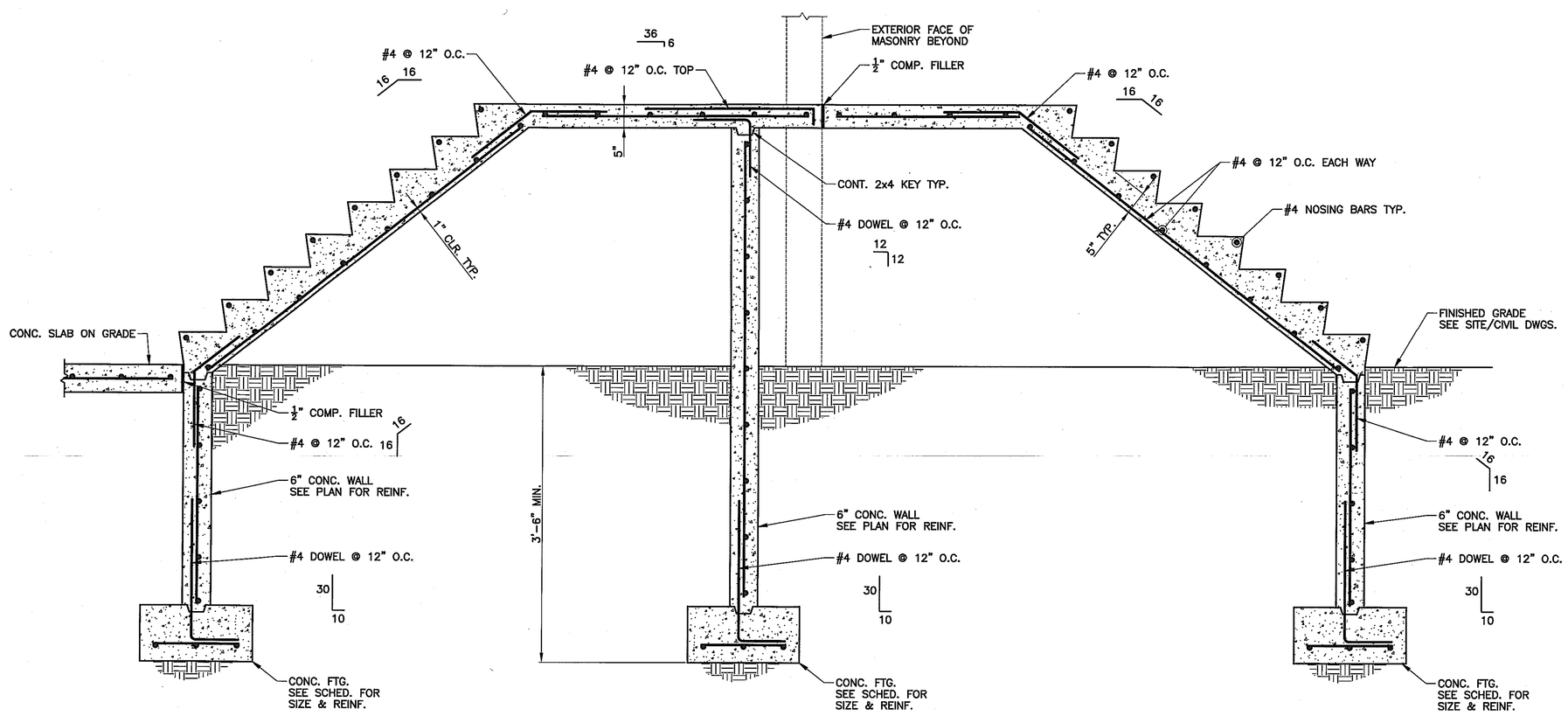


SECTION 104 S4.00
SCALE: 3/4" = 1'-0"

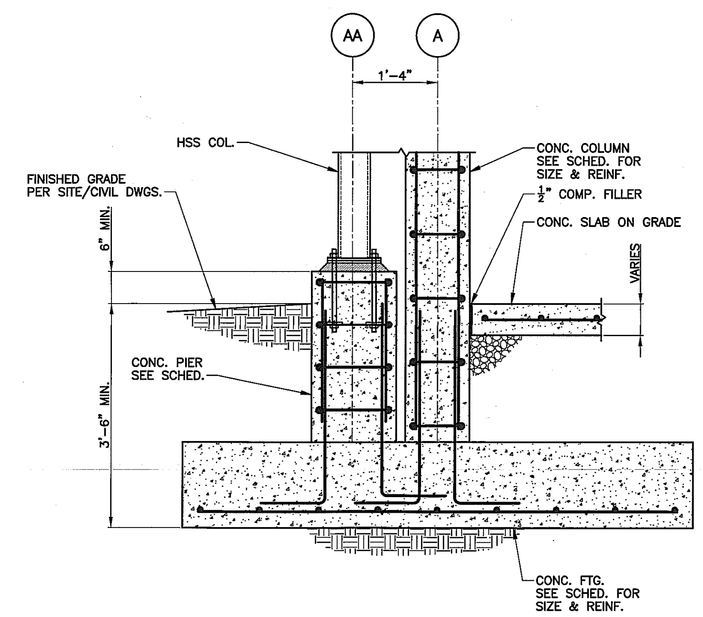


SECTION 105 S4.00
SCALE: 3/4" = 1'-0"

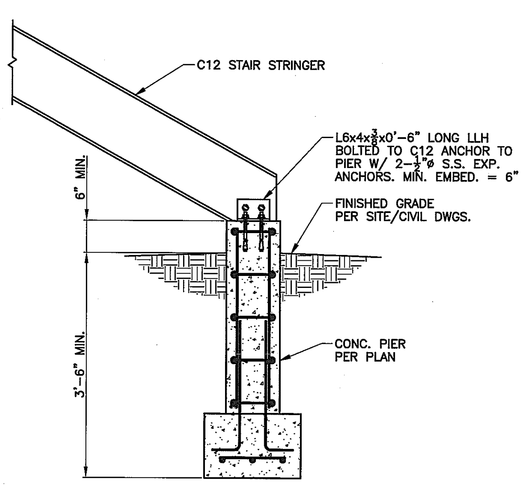


SECTION 106 S4.00
SCALE: 3/4" = 1'-0"

THIS DRAWING HAS BEEN PRODUCED ON ATLANTIC ENGINEERING SERVICES' CADD SYSTEM. ANY OTHER LETTERING, LINES OR SYMBOLS, OTHER THAN PROFESSIONAL STAMPS AND SIGNATURES, HAVE BEEN MADE WITHOUT THE AUTHORIZATION OF ATLANTIC ENGINEERING SERVICES AND ARE INVALID.

AES PROJECT #07-114 AES PLOT DATE: 04.30.07

Kimball
L. Robert Kimball & Associates
Architects and Engineers, Inc.
615 West Highland Ave.
Ebensburg, PA 15931
phone (814) 472-7700
fax (814) 472-7712
email oebldgs@lrkimball.com
web site www.lrkimball.com

CONSULTANTS

Atlantic Engineering Services
650 Smithfield Street • Suite 1200
Pittsburgh • Pennsylvania 15222
Phone: 412.338.9000 Fax: 412.338.0051
Email: pgh@aesnj.com

PROFESSIONAL

COMMONWEALTH OF PENNSYLVANIA
REGISTERED PROFESSIONAL
ROBERT SERGIO BERTOCCHI
ENGINEER

PROJECT NAME:

# WESTMORELAND COUNTY COMMUNITY COLLEGE CLASS A BURN BUILDING

OWNER:

WESTMORELAND COUNTY COMMUNITY COLLEGE
YOUNGWOOD, PA 15697

KEYPLAN

| MARK | DATE | DESCRIPTION |
|---|---|---|

| | |
|---|---|
| ISSUE: | 05 / 02 / 07 |
| PROJECT NO: | 07-2200-0175 |
| CAD DWG FILE: | |
| DRAWN BY: | BJS |
| CHECKED BY: | RSB |

© L. Robert Kimball & Associates
Architects and Engineers, Inc.

SHEET TITLE

SECTIONS AND DETAILS

S4.00

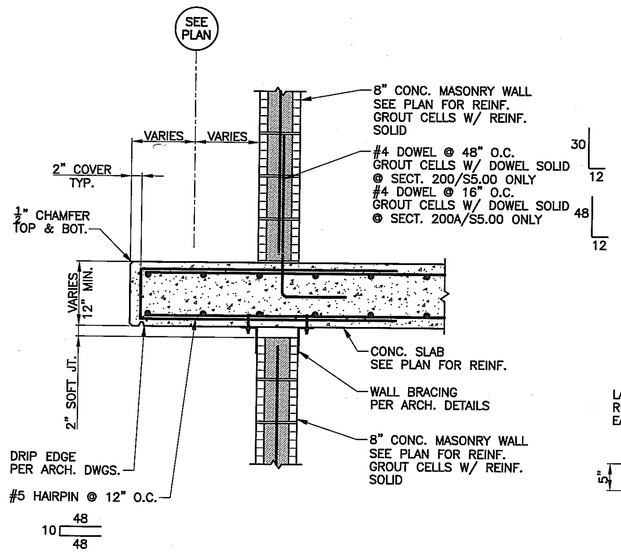


SECTION 200 S5.00 200A S5.00
SCALE: 3/4" = 1'-0"

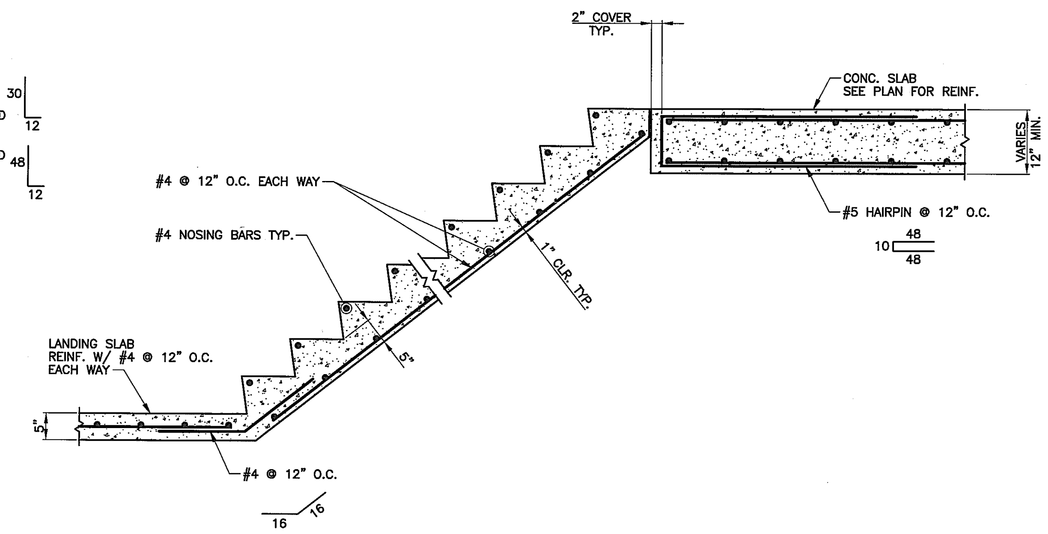


SECTION 201 S5.00
SCALE: 3/4" = 1'-0"

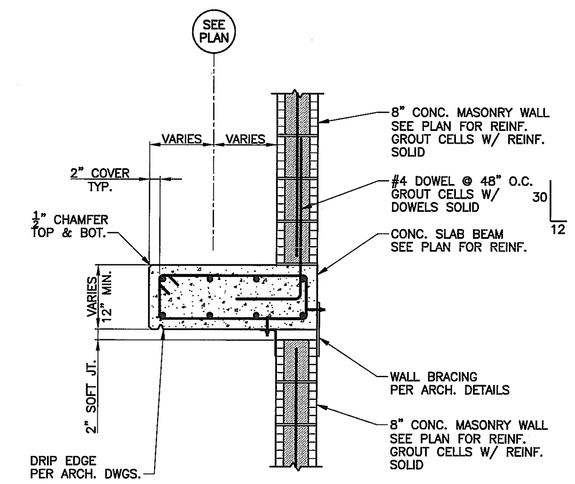


SECTION 202 S5.00
SCALE: 3/4" = 1'-0"

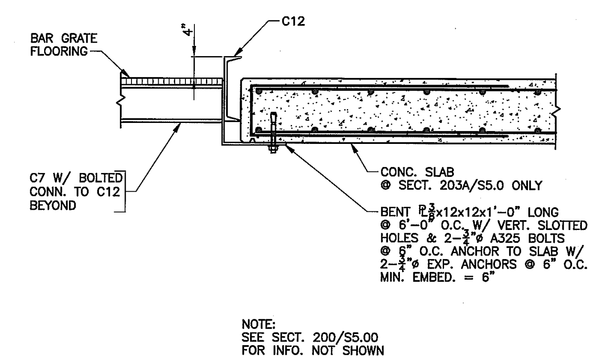


NOTE:
SEE SECT. 200/S5.00
FOR INFO. NOT SHOWN

SECTION 203 S5.00 203A S5.00
SCALE: 3/4" = 1'-0"

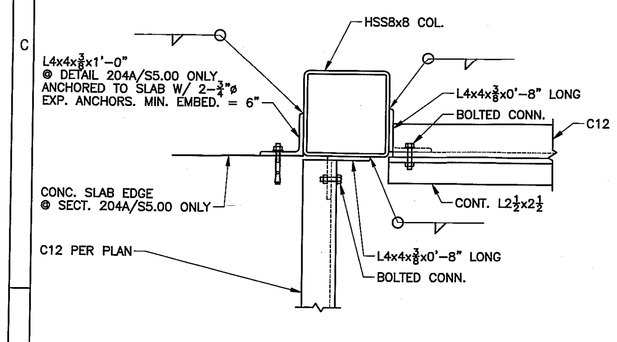


DETAIL 204 S5.00 204A S5.00
SCALE: 1 1/2" = 1'-0"

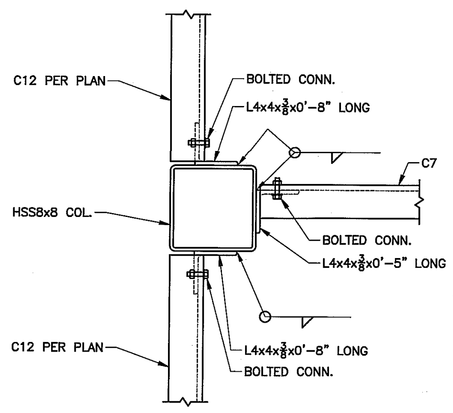


DETAIL 205 S5.00
SCALE: 1 1/2" = 1'-0"

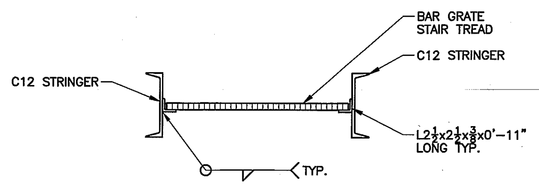


SECTION 206 S5.00
SCALE: 3/4" = 1'-0"

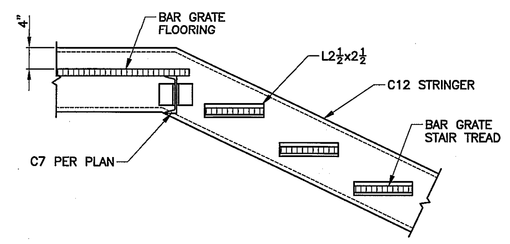


SECTION 207 S5.00
SCALE: 3/4" = 1'-0"

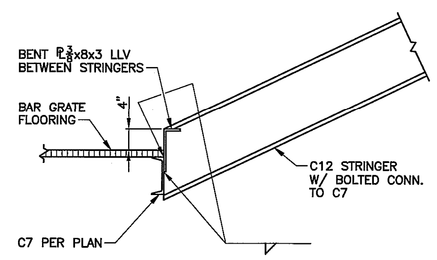


SECTION 208 S5.00
SCALE: 3/4" = 1'-0"

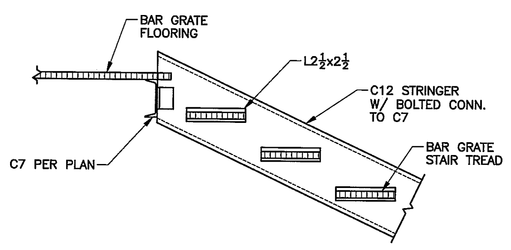


SECTION 209 S5.00
SCALE: 3/4" = 1'-0"

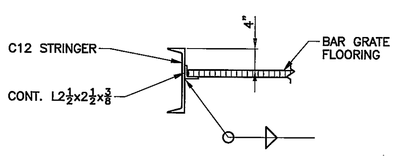


SECTION 210 S5.00
SCALE: 3/4" = 1'-0"

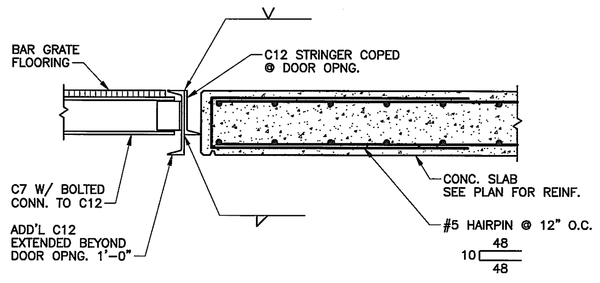


NOTE:
SEE SECT. 200/S5.00
FOR INFO. NOT SHOWN

SECTION 211 S5.00
SCALE: 3/4" = 1'-0"

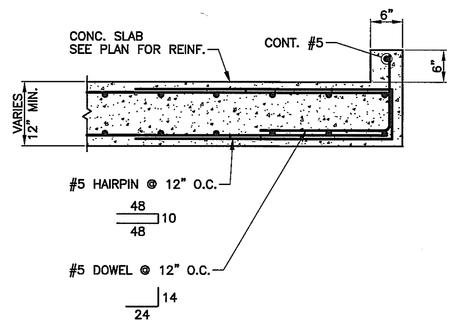


SECTION 212 S5.00
SCALE: 3/4" = 1'-0"

THIS DRAWING HAS BEEN PRODUCED ON ATLANTIC ENGINEERING SERVICES' CADD SYSTEM. ANY OTHER LETTERING, LINES OR SYMBOLS, OTHER THAN PROFESSIONAL STAMPS AND SIGNATURES, HAVE BEEN MADE WITHOUT THE AUTHORIZATION OF ATLANTIC ENGINEERING SERVICES AND ARE INVALID.

AES PROJECT #07-114 AES PLOT DATE: 04.30.07


Kimball
L. Robert Kimball & Associates
Architects and Engineers, Inc.

615 West Highland Ave.
Ebensburg, PA 15931

phone (814) 472-7700
fax (814) 472-7712
email oebldgs@lrkimball.com
web site www.lrkimball.com


CONSULTANTS


Atlantic Engineering Services
659 Smithfield Street • Suite 1200
Pittsburgh • Pennsylvania 15222
Phone: 412.338.9000 Fax: 412.338.0051
Email: pgh@aesp.com


PROFESSIONAL

COMMONWEALTH OF PENNSYLVANIA REGISTERED PROFESSIONAL ROBERT SERGIO BERTOCCHI ENGINEER

PROJECT NAME:

# WESTMORELAND COUNTY COMMUNITY COLLEGE CLASS A BURN BUILDING

OWNER:

WESTMORELAND COUNTY COMMUNITY COLLEGE

YOUNGWOOD, PA 15697

KEYPLAN

| MARK | DATE | DESCRIPTION |
|---|---|---|
| | | |

| | |
|---|---|
| ISSUE: | 05 / 02 / 07 |
| PROJECT NO: | 07-2200-0175 |
| CAD DWG FILE: | |
| DRAWN BY: | BJS |
| CHECKED BY: | RSB |


© L. Robert Kimball & Associates Architects and Engineers, Inc.


SHEET TITLE

SECTIONS AND DETAILS

S5.00

## ELECTRICAL LEGEND

- LIGHT FIXTURE – SEE LIGHT FIXTURE SCHEDULE
- SWITCHED CIRCUIT – LIGHTING
- UNSWITCHED CIRCUIT – LIGHTING
- BRANCH CIRCUIT
- HOME RUN TO PANEL BOARD
- A-1 BRANCH CIRCUIT NUMBER
- DUPLEX RECEPTACLE – FAULT INTERRUPTING, WEATHER PROTECTED
- PANEL BOARD – SURFACE MOUNTED
- M MOTOR – BY OTHERS
- SAFETY TYPE DISCONNECT SWITCH
- J JUNCTION BOX WITH FINAL CONNECTION TO EQUIPMENT
- JKL JUNCTION BOX WITH FINAL CONNECTION TO RECESSED CEILING MOUNTED TYPE K DUPLEX THERMOCOUPLE – TWO PER J-BOX
- JK JUNCTION BOX WITH FINAL CONNECTION TO TYPE K DUPLEX THERMOCOUPLE, 30" A.F.F.

## DRAWING SYMBOLS

- DRAWING TAG: E100 — FIRST FLOOR PLAN, 1/8"=1'-0"
- EQUIPMENT LABEL: XXX/XX
- DRAWING NOTE: 1
- DRAWING KEYED NOTE: 1

## ELECTRICAL DRAWING LIST

| | |
|---|---|
| E0.01 | ELECTRICAL DRAWING LEGEND AND SPECIFICATIONS |
| E2.00 | ELECTRICAL PLANS |

## ABBREVIATIONS

| | |
|---|---|
| A | AMPERES |
| AFF | ABOVE FINISHED FLOOR |
| C | CONDUIT |
| CB | CIRCUIT BREAKER |
| CKT | CIRCUIT |
| EC | ELECTRICAL CONTRACTOR |
| EF | EXHAUST FAN |
| FU | FUSE(S) |
| G OR GND | GROUND |
| GC | GENERAL CONTRACTOR |
| GFI | GROUND FAULT INTERRUPTING |
| HC | HEATING CONTRACTOR |
| HP | HORSEPOWER |
| L | LAMP |
| LP | LIGHTING PANEL |
| MCB | MAIN CIRCUIT BREAKER |
| MLO | MAIN LUG ONLY |
| NC | NORMALLY CLOSED |
| NEC | NATIONAL ELECTRIC CODE |
| NE | NORMAL/EMERGENCY |
| NF | NON FUSED |
| NO | NORMALLY OPEN |
| P | PUMP OR POLE |
| PNL | PANEL |
| PP | POWER PANEL |
| RTU | ROOF TOP UNIT |
| SEF | SMOKE EXHAUST FAN |
| SLP | SITE LIGHTING PANEL |
| SM | SURFACE MOUNT |
| SW | SWITCH |
| V | VOLTS |
| W | WATTS OR WIRE |
| W/ | WITH |
| WP | WEATHERPROOF |

## GENERAL NOTES

1. CONTRACTOR IS RESPONSIBLE FOR ENTIRE BID DOCUMENT SET, I.E. IF WORK IS SHOWN ON OTHER TRADE DRAWING AS BY ELECTRICAL CONTRACTOR, ELECTRICAL CONTRACTOR IS RESPONSIBLE FOR THAT WORK.
2. COORDINATE LOCATION OF LIGHTING FIXTURES, CONDUIT, CABLE TRAY AND EQUIPMENT/DEVICES WITH OTHER TRADES INCLUDING ARCHITECTURAL DETAILS.
3. PROVIDE #12 AWG MINIMUM FOR POWER AND LIGHTING BRACH CIRCUIT WIRING.
4. USE #10 AWG CONDUCTORS (MINIMUM) FOR ALL 20 AMP, 120 VOLT CIRCUIT RUNS GREATER THAN 50' ONE WAY FROM PANEL BOARD TO FIRST DEVICE/FIXTURE.
5. USE #10 AWG CONDUCTORS (MINIMUM) FOR ALL 20 AMP, 277 VOLT CIRCUIT RUNS GREATER THAN 200' ONE WAY FROM PANEL BOARD TO FIRST DEVICE/FIXTURE.
6. PROVIDE ALL LIGHTING FIXTURES WITH BALLASTS. MASTER/SLAVE BALLASTING IS NOT ACCEPTABLE.
7. ALL BRANCH CIRCUITS TO HAVE ONE PHASE, ONE NEUTRAL AND ONE GROUND UNLESS OTHERWISE SPECIFIED.

## LIGHTING FIXTURE SCHEDULE

| TYPE | DESCRIPTION | MANUFACTURERS | CATALOG NUMBER | LAMPS | VOLTAGE | NOTES |
|---|---|---|---|---|---|---|
| A | WALL SCONCE | DAY-BRITE OR APPROVED EQUAL | WLM-050-M-MT-PE | 50W MH | 120 | 1 |
| | | | | | | |
| | | | | | | |

NOTES:
ALL TYPE A FIXTURES TO BE CONTROLLED BY LIGHTING CONTROL PANEL LOCATED IN ADMIN BLDG. ELCTRICAL ROOM

## MINI-POWER CENTER SCHEDULE — LC1

480V TO 208/120V 15 KVA TRANSFORMER

MAINS: 40A — MOUNTING: SURFACE
VOLTAGE: 208/120
PHASE: 3 — WIRES: 4

| NO | PH | LOAD KW | DESCRIPTION | C/B | C/B | LOAD KW | DESCRIPTION | PH | NO |
|---|---|---|---|---|---|---|---|---|---|
| 1 | A | 2.00 | ------ | ------ | 20/1 | 0.30 | EXTERIOR BLDG. LIGHTING | A | 2 |
| 3 | B | 2.00 | EXHAUST FAN | 20/3 | 20/1 | 1.00 | RECEPTACLES | B | 4 |
| 5 | C | 2.00 | ------ | ------ | 20/1 | 0.50 | CONTROLLER ELEC. HEATER | C | 6 |
| 7 | A | | SPARE | 20/1 | 20/1 | | SPARE | A | 8 |
| 9 | B | | SPARE | 20/1 | 20/1 | | SPARE | B | 10 |
| 11 | C | | SPARE | 20/1 | 20/1 | | SPARE | C | 12 |
| 13 | A | | | | | | | A | 14 |
| 15 | B | | | | | | | B | 16 |
| 17 | C | | | | | | | C | 18 |
| | A | 2.00 | TOTALS | A 2.30 | | | 0.30 A | | |
| | B | 2.00 | | B 3.00 | | | 1.00 B | | |
| | C | 2.00 | | C 2.50 | | | 0.50 C | | |

MANUFACTURER CATALOG NUMBER:
CUTLER HAMMER P48G28T15P OR APPROVED EQUAL

CONNECTED LOAD 5.30 KW CONNECTED AMPS 22.08 A

## ELECTRICAL SPECIFICATIONS

1.1 WORK INCLUDES

A. ALL WORK SHALL BE MANUFACTURED, TESTED AND INSTALLED IN ACOORDANCE WITH THE NATIONAL ELECTRICAL CODE (NEC) AND ALL APPLICABLE LOCAL CODES. THE CONTRACTOR SHALL FURNISH A FIRE UNDERWRITER'S CERTIFICATE OF INSPECTION COVERING THE WORK INSTALLED UNDER THIS SPECIFICATION. THE CONTRACTOR SHALL OBTAIN AND PAY FOR ALL PERMITS AND CERTIFICATES. PAY ALL SALES TAX AS APPLICABLE.

B. THOROUGHLY EXAMINE THE ARCHITECTURAL AND MECHANICAL DRAWINGS PRIOR TO COMMENCEMENT OF ANY WORK. COORDINATE WORK WITH ALL OTHER TRADES.

C. THE CONTRACTOR SHALL VISIT THE JOB SITE PRIOR TO BID DATE TO EXAMINE THE CONDITONS UNER WHICH HIS WORK IS TO BE PERFORMED. NO EXTRAS SHALL BE ALLOWED FOR FAILURE TO NOTE EXISITING CONDITIONS.

D. ALL ELECTRICAL EQUIPMENT SHALL BE NEW, OF FIRST QUALITY, AND SHALL BE FURNISHED, DELIVERED, ERECTED, CONNECTED, AND FINISHED IN EVERY DETAIL.

E. ONLY THOSE MATERIALS AND EQUIPMENT NAMED ON THE SUBSTITUTIONS WILL NOT BE ACCEPTABLE UNLESS DETERMINED TO BE IN THE BEST INTEREST OF THE OWNER.

F. CONTRACTOR SHALL PROVIDE TEMPORARY LIGHTING AND POWER AS REQUIRED DURING CONSTRUCTION. ALL TEMPORARY WORK SHALL BE IN ACCORDANCE WITH LATEST OSHA SAFETY REQUIREMENTS AND SHALL BE COMPLETELY REMOVED UPON COMPLETION OF THE PROJECT.

G. THE CONTRACT DRAWINGS ARE DIAGRAMMATIC AND INDICATE THE GENERAL ARRANGEMENT OF SYSTEMS AND WORK INCLUDED IN THE CONTRACT. DO NOT SCALE THE DRAWINGS, CONSULT THE ARCHITECTURAL DRAWINGS AND DETAILS FOR EXACT LOCATION OF EQUIPMENT, WHERE SAME ARE NOT DEFINITELY LOCATED, OBTAIN THIS INFORMATION FROM THE ENGINEER.

H. DUE TO THE SMALL SCALE OF THE DRAWINGS , IT IS NOT POSSIBLE TO INDICATE ALL RACEWAY OFFSETS, RISERS AND DRIPS, FITTINGS, AND ACCESSORIES AS MAY BE REQUIRED TO MEEET SUCH CONDITIONS,

I. REFER TO ARCHITECTURAL SPECIFICATIONS FOR ADDITIONAL CONDITIONS.

1.2 GUARANTEE

A. THE ELECTRICAL CONTRACTOR SHALL LEAVE THE ENTIRE ELECTRICAL SYSTEM INSTALLED UNDER THIS CONTRACT IN PROPER WORKING ORDER AND SHALL WITHOUT ADDITIONAL CHARGE REPLACE ANY WORK OR MATERIAL WHICH DEVELOPS DEFECTS FORM ORDINARY WEAR AND TEAR WITHIN ONE YEAR FROM DATE OF FINAL ACCEPTANCE.

1.3 TESTS

A. THE CONTRACTOR SHALL FINISH ALL EQUIPMENT AND APPLIANCES NECESSARY FOR TESTING THE COMPLETE WIRING SYSTEM DURING THE PROGRESS OF THE WORK, AS MAY BE DIRECTED BY THE ENGINEER. THE TESTS SHALL DEMOSTRATE TO THE SATISFACTION OF THE ENGINEER THAT ALL CIRCUITS ARE FREE FROM UNSPECIFIED GROUNDS.

1.4 SHOP DRAWINGS

A. WITHIN 15 DAYS AFTER AWARD OF THE CONTRACT, THE CONTRACTOR SHALL SUBMIT TO THE ENGINEER FOR APPROVAL A LIST OF MANUFACTURER'S NAMES OF MATERIAL AND EQUIPMENT HE PROPSES TO PROVIDE.

B. AFTER RECEIVING APPROVAL OF EQUIPMENT AND MATERIAL MANUFACTURERS AND PRIOR TO DELIVERY OF ANY MATERIAL TO THE JOB SITE, SUBMIT FOR APPROVAL FIVE (5) COPIES OF SHOP DRAWINGS, EACH ITEM OF EQUIPMENT AND MATERIALS PROPOSED SHALL BE A STANDARED CATALOG PRODUCT OF THE APPROVED MANUFACTURER.

C. INSTALL WORK ONLY AFTER "APPROVED" SHOP DRAWINGS ARE RECEIVED.

1.5 RACEWAYS

A. ALL CONDUIT RACEWAYS SHALL BE EMT, UNLESS OTHERWISE SPECIFIED, MINIMUM SIZE SHALL BE 3/4". ALL CONDUIT RACEWAYS SHALL BE EXPOSED ON THE EXTERIOR OF THE BUILDING. THE USE OF ANY PVC CONDUIT IS PROHIBITED.

B. RUN EXPOSED RACEWAY PARALLEL TO BUILDING LINES MAKING TURNS WITH APPROVED RACEWAYS FITTINGS, MANUFACTURED ELLS, CONCENTRIC FIELD BEND OR PULLBOXES.

C. MINIMUM OF SIX INCH CLEARANCE BETWEEN ALL WIRING AND PARALLEL RUNS OF HOT WATER PIPES.

D. PROVIDE ALL EMPTY RACEWAYS WITH 20 POUND TEST MINIMUM PLASTIC CORD OR WIRE, FISH CONTINUOUS FORM OUTLET TO OUTLET.

E. INSTALL RACEWAY SO AS TO INSURE AGAINST THE COLLECTION OF TRAPPED CONDENSATION, ARRANGED TO BE FREE FROM TRAPS WHEREVER POSSIBLE. USE SCREW OR PUSH-ON CAPS TO PREVENT THE LODGEMENT OF FOREIGN PARTICLES IN THE RACEWAYS, FITTINGS AND BOXES DURING CONSTRUCTION.

F. ALL RACEWAYS IN WHICH MOISTURE HAS COLLECTED MUST BE SWABBED OUT BEFORE PULLING WIRE.

G. RUN ALL GROUDING CONDUCTORS IN CONDUITS, PROVIDE ALL METAL SURFACE RACEWAYS WITH MANUFACTURED ELLS, SUPPORTS, COUPLINGS, ETC., FOR A COMPLETE INSULATION.

H. GROUNDING CONDUCTORS MAY BE INSTALLED IN EMT, MINIMUM SIZE 3/4". PROVIDE COMPRESSION FITTINGS FOR ALL EMT; SET SCREW FITTINGS SHALL NOT BE ACCEPTABLE.

I. LIQUID TIGHT CONDUIT MAY BE USED FOR THE FINAL CONNECTION TO MECHANICAL EQUIPMENT, NOT TO EXCEED 3'

J. FLEXIBLE CONDUIT MAY BE USED FOR FINAL CONNECTIONS TO LIGHTING FIXTURES. CONDUIT MAY BE 1/2" MINIMUM AND SHALL NOT EXCEED 6'.

1.8 CONDUCTORS

A. PROVIDE FOR ALL SERVICE, FEEDER, BRANCH , AND CONTROL WIRING. COLOR SHALL BE GREEN FOR GROUNDING CONDUCTORS, AND WHITE FOR NEUTRALS, EXCEPT WHERE NEUTRALS OR MORE THAN ONE SYSTEM ARE INSTALLED IN SAME RACEWAY OR BOX, THE OTHER NEUTRAL SHALL BE WHITE WITH A COLORED (NOT GREEN) STRIPE. THE COLOR OF THE UNGROUNDED CONDUCTORS IN DIFFERENT VOLTAGE SYSTEMS SHALL BE AS FOLLOWS:

1. 120/208 VOLT, 3-PHASE:
   PHASE A – BLACK
   PHASE B – RED
   PHASE C – BLUE
2. 277/480 VOLT, 3-PHASE:
   PHASE A – YELLOW
   PHASE B – BROWN
   PHASE C – ORANGE
3. 120/240 VOLT, 1-PHASE: RED AND BLACK

B. ALL FEEDER AND BRANCH CIRCUIT CONDUCTORS SHALL BE COPPER RATED 600 VOLTS WITH TYPE "THWN" INSULATION. MINIMUM SIZE BRANCH CIRCUIT CONDUCTOR SHALL BE #12. MINIMUM SIZE BRANCH CIRCUIT CONDUCTOR SHALL BE #12. CONDUCTOR SIZE #12 AND #10 SHALL BE SOLID. CONDUCTORS SIZE #8 AND LARGER SHALL BE STRANDED.

C. A GREEN COLORED INSULATED EQUIPMENT GROUND CONDUCTOR SHALL BE PROVIDED FOR ALL FEEDERS AND ALL SINGLE AND THREE-PHASE BRANCH CIRCUITS. THE REQUIRED EQUIPMENT GROUNDING CONDUCTORS AND STRAPS SHALL BE SIZED IN COMPLIANCE WITH N.E.C. TABEL 250-95

D. FOR CIRCUITS REQUIRING AN ISOLATED GROUND, IN ADDTION TO THE EQUIPMENT GROUND, PROVIDE A GREEN WITH YELLOW STRIPE COLORED INSULATED GROUND.

1.9 OUTLET BOXES

A. PROVIDE AT EACH OUTLET OR DEVICE AN WEATHER PROOF OUTLET BOX IN WHICH RACEWAYS AND CONDUCTORS SHALL TERMINATE. OUTLET BOXES SHALL BE NONMETALLIC PROVIDED WITH KNOCK-OUTS.

B. OULET BOXES FOR LIGHTING FIXTURES IN ADDITION TO CABLE CLAMPS SHALL EACH BE PROVIDED WITH 3/8" FIXTURE STUD FASTENED THROUGH FROM THE BACK OF THE BOX WHERE IT CAN BE USED TO SUPPORT THE WEIGHT OF THE FIXTURE.

C. SIZES AND TYPE OF OUTLET BOXES SHALL BE SUFFICIENT TO ACCOMMODATE STRUCTURAL CONDITIONS, NUMBER AND SIZE OF RACEWAYS AND CONDUCTORS ENTERING, DEVICE OR FIXTURE SERVED, AND SPLICES CONTAINED THEREIN.

1.10 WIRING DEVICES

A. WIRING DEVICES SHALL BE AS MANUFACTURED BY HUBBELL, BRYANT, ARROW-HART, GE, P&S, OR LEVITON.

1.12 FASTENINGS AND SUPPORTS

A. PIPE STAPS AND HANGER RODS SHALL BE FASTENED TO CONCRETE BY MEANS OF INSERTS OR EXPANSION BOLTS, TO HOLLOW MASONRY BY MEANS OF TOGGLE BOLTS. WOODEN PLUGS AND SHIELDS SHALL NOT BE USED FOR FASTENING PIPE STRAPS AND HANGERS. IN LIEU OF INSERTS OR EXPANSION BOLTS, POWER-DRIVEN FASTENERS MAY BE USED TO ATTACH STRAPS AND HANGER RODS TO CONCRETE. ALL U-BOLTS, CLAMPS, ATTACHMENTS, AND OTHER HARDWARE NECESSARY FOR HANGER ASSEMBLY, AND FOR SECURING HANGER RODS AND CONDUIT SHALL BE PROVIDED.

B. ALL CONDUITS SHALL BE SECURELY AND INDEPENDENTLY SUPPORTED SO THAT NO STRAIN WILL BE TRANSMITTED TO OUTLET BOX. SUPPORT SHALL BE RIGID ENOUGH TO PREVENT DISTORTION OF CONDUITS DURING WIRE PULLING.

C. INDIVIDUAL HORIZONTAL CONDUITS SHALL BE SUPPORTED BY 1/2 ROUND TWO HOLE PIPE STRAPS OR SEPARATE PIPE HANGERS FOR SIZED 1 1/2" AND SMALLER, AND BY SEPARATE PIPE HANGERS FOR LARGER SIZES, SPRING STEEL FASTENERS SHALL BE SPECIFICALLY DESIGNED FOR SUPPORTING SINGLE CONDUITS. TYPE, SIZE AND SPACING OF SPRING STEEL FASTENERS TOGETHER WITH ACCESSORIES SHALL BE A APPROVED BY THE A/E, AND THE CONTRACTOR SHALL SUBMIT ALL APPLICABLE LOAD AND RATING DATA FOR APPROVAL. UNLESS OTHERWISE SPECIFIED, WIRE SHALL NOT BE USED AS A MEANS OF SUPPORT.

D. WHERE TWO OR MORE HORIZONTAL CONDUITS RUN PARALLEL AND AT THE SAME ELEVATION, THEY SHALL BE SUPPORTED ON MULTIPLE (TRAPEZE) PIPE HANGERS. EACH CONDUIT SHALL BE SECURED TO THE HORIZONTAL HANGER MEMBER BY A U-BOLT, ONE-HOLE STRAP OR OTHER SPECIALLY DESIGNED AND APPROVED FASTENER.

E. SUPPORTS FOR HORIZONTAL CONDUITS SHALL BE SPACED NO MORE THAN 8' APART, WITH NO LESS THAN TWO SUPPORTS FOR EACH 10' STRAIGHT LENGTH AND ONE SUPPORT NEAR EACH ELBOW OR BEND.

1.13 MINI-POWER CENTERS

A. UNIT ENCLOSURE SHALL BE RATED FOR OUTDOOR ENVIRONMENTAL CONDITIONS. HAVE A NEMA TYPE 3R RATING.

B. HOUSING SHALL BE GALVANIZED STEEL WITH FACTORY FINISH. FINISH SHALL CONSIST OF A TWO COAT, BAKED-ON FINISH OF PRIME COAT AND THERMOSETTING TOPCOAT.

C. MANUFACTURER'S SHALL BE SIEMENS, CUTLER-HAMMER, OR SQUARE-D.

1.14 ELECTRICAL ENCLOSURES

A. SHALL BE A DOUBLE DOOR FREE STANDING ENCLOSURE THAT COMFORMS TO NEMA TYPE 4 STANDARDS. ENCLOSURE AND DOORS SHALL BE FABRICATED FROM 10 GUAGE STEEL WITH A ANSI 61 POWDER FINISH. DOORS TO BE SECURED TO THE BODY WITH A HEAVY-DUTY CONTINUOUS HINGES AND HAVE A STAINLESS STEEL PADLOCK HANDLE. ALL SEAMS SHALL BE WELDED AND FINISHED SMOOTH.

B. ENCLOSURE TO HAVE REMOVABLE CENTER POST FOR COMPLETE FRONT ACCESS.

C. INSIDE OF ENCLOSURE TO BE FITTED WITH 3/4-INCH TREATED PLYWOOD WITH ONE SIDE FINISHED SMOOTH FOR MOUNTING INSTALLATION OF INTERNAL DEVICES.

D. BOTTOM OF ENCLOSURE SHALL HAVE HOLES/KNOCKOUTS FOR MOUNTING TO CONCRETE BASE AND FOR CONDUIT PENITRATIONS.

E. SIZES AND TYPE OF ENCLOSURE SHALL BE SUFFICIENT TO ACCOMMODATE DEVICES, RACEWAYS AND EQUIPMENT CONTAINED THEREIN.

F. MANUFACTURER'S SHALL BE B-LINE, HOFFMAN, OR WEIGMANN.

1.15 INDENTIFICATION FOR ELECTRICAL SYSTEMS

A. UNDERGROUND-LINE WARNING TAPE

1. RECOMMENDED BY MANUFACTURER FOR THE METHOD OF INSTALLATION AND SUITABLE TO IDENTIFY AND LOCATE UNDERGROUND ELECTRICAL LINES.
2. PRINTING OF TAPE SHALL BE PERMANENT AND SHALL NOT BE DAMAGED BY BURIAL OPERATIONS.
3. TAPE MATERIAL AND INK SHALL BE CHEMICALLY INERT, AND NOT SUBJECT TO DEGRADING WHEN EXPOSED TO ACIDS, ALKALIS, AND OTHER DESTRUCTIVE SUBSTANCES COMMONLY FOUND IN SOILS.
4. TAPE SHALL NOT BE LESS THAN 6 INCHES WIDE BY 4 MILS THICK.

B. EQUIPMENT INDENTIFICATION LABELS

1. ENGRAVED, LAMINATED ACRYLIC OR MELAMINE LABEL: PUNCHED OR DRILLED FOR SCREW MOUNTING. WHITE LETTERS ON A BLACK BACKGROUND. MINIMUM LETTER HEIGHT SHALL BE 3/8 INCH.
2. LOCATION: INSTALL INDENTIFICATION MATERIALS AND DEVICES AT LOCATION FOR MOST CONVENIENT VIEWING WITHOUT INTERFERENCE WITH OPERATION AND MAINTENANCE OF EQUIPMENT.
3. APPLY INDENDIFICATION DEVICES TO SURFACES THAT REQUIRE FINISH AFTER COMPLETING FINISH WORK.

1.16 LIGHTING

A. LAMPS

1. ALL FIXTURES SHALL BE COMPLETE WITH NEW LAMPS OF EITHER PHILLIPS, GE, OR SYLVANIA MANUFACTURE.

B. FIXTURES

1. FIXTURES SHALL BE AS INDICATED ON THE LIGHTING FIXTURE SCHEDULE AND INDICATE THE QUALITY OF EQUIPMENT THAT IS TO BE PROVIDED.

C. BALLASTS

1. ALL FLUORESCENT BALLASTS SHALL BE HIGH FREQUENCY ELECTRONIC, "CLASS P" TYPE AS DESIGNATED BY U.L. AND SHALL MEET THE REQUIREMENTS OF SECTION 410-76 OF THE NATIONAL ELECTRICAL CODE. BALLASTS SHALL HAVE ETL AND CBM CERTIFICATION LABELS AND SHALL BE HIGH POWER FACTOR TYPE. PROVIDE MARK III
2. ALL BALLASTS SHALL BE COVERED BY A TWO-YEAR WARRANTY AGAINST DEFECTS. WARRANTY SHALL INCLUDE PAYMENT FOR NORMAL LABOR COSTS OF REPLACEMENT OF IN WARRANTY BALLASTS.
3. LUMINARIES ASSEMBLIES, INCLUDING BALLASTS, SHALL BE REASONABLY DEVOID OF OBJECTIONABLE "HUM," IN THE NORMAL AMBIENT NOISE OF THE APPLICATION, AS JUDGED BY THE A/E.
4. ACCEPTABLE MANUFACTURERS ARE ADVANCE, MAGNETEK, SYLVANIA OR EQUAL.

1.17 GROUNDING

1. ALL GROUNDING AND BONDING SHALL COMPLY WITH ARTICLE 250 OF THE NEC.

A. GROUND RODS SHALL BE COPPER. CABLE CONNECTION TO GROUND RODS SHALL BE UNINSULATED STRANDED COPPER, SIZED PER NEC. ALL UNDERGROUND CONNECTIONS SHALL BE EXOTHERMIC WELD PROCESS. ABOVE GROUND CONNECTION SHALL BE MADE WITH APPROVED GROUNDING CONNECTORS AND FITTINGS OR THE EXOTHERMIC WELD PROCESS.

B. THE FOLLOWING EQUIPMENT SHALL BE SOLIDLY GROUNDED TO A WALL MOUNTED GROUND BUS BY A BARE COPPER CONDUCTOR SIZED PER NFPA – 70 TABLE 250-94 "GROUNDING ELECTRODE CONDUCTOR"; EXTERIOR GROUND GRID SYSTEM, SERVICE ENTRANCE EQUIPMENT GROUND BUS, METALLIC WATER SYSTEM PIPING.

E. THE FOLLOWING EQUIPMENT SHALL BE SECURELY GROUNDED BY AN INSULATED COPPER CONDUCTOR SIZED PER TABLE 250-95. MINIMUM SIZE EQUIPMENT GROUNDING CONDUCTORS FOR GROUNDING RACEWAY AND EQUIPMENT: BRANCH CIRCUIT PANEL BOARDS, ALL EXTERIOR BRANCH CIRCUITS, ALL INTERIOR BRANCH CIRCUITS AND FEEDERS.

1.18 EARTHWORK – TRENCHING FOR ELECTRICAL CONDUITS

A. EXCAVATE TRENCH 6 INCHES DEEPER THAN FROST LINE TO ALLOW FOR BEDDING COURSE.

B. PLACE 6 INCHES OF CLEAN GRAVEL FOR BEDDING MATERIAL ON TRENCH BOTTOM. SHAPE BEDDING COURSE TO PROVIDE CONTINUOUS SUPPORT OF JOINTS, FITTINGS, AND CONDUIT.

C. PLACE BACKFILL ON SUBGRADE FREE OF MUD, FROST, SNOW OR ICE.

D. PLACE AND COMPACT INITIAL BACKFILL OF SUB-BASE MATERIAL, FREE OF PARTICLES 2 INCHES IN ANY DIMENSION. DO NOT USE HEAVY-DUTY, HYDRAULIC-OPERATED, COMPACTION EQUIPMENT TO HELP PREVENT DAMAGE TO CONDUIT.

E. RESTORE SURFACE FEATURES AT AREAS DISTURBED BY EXCAVATION AND REESTABLISH ORIGINAL GRADES, UNLESS OTHERWISE INDICATED. REPLACE REMOVED SOD IMMEDIATELY AFTER BACKFILLING IS COMPLETED.

F. INCLUDE NECESSARY TOPSOILING, FERTILIZING, LIMING, SEEDING AND SODDING TO DISTURBED AREA TO RESTORE TO ORIGINAL APPERANCE.

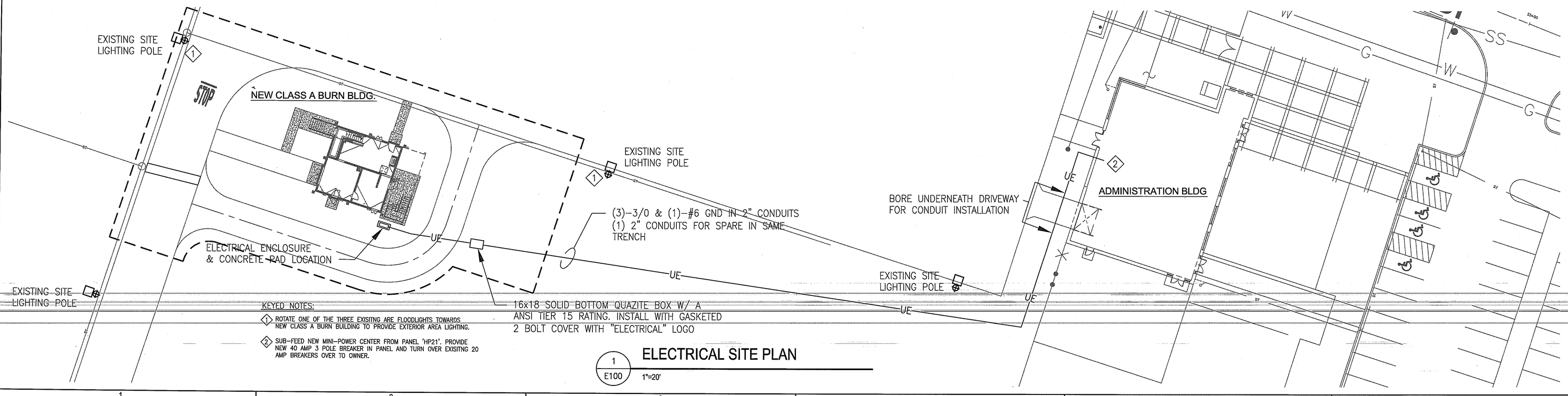


KEYED NOTES:
1. ROTATE ONE OF THE THREE EXISITNG ARE FLOODLIGHTS TOWARDS NEW CLASS A BURN BUILDING TO PROVIDE EXTERIOR AREA LIGHTING.
2. SUB-FEED NEW MINI-POWER CENTER FROM PANEL 'HP21'. PROVIDE NEW 40 AMP 3 POLE BREAKER IN PANEL AND TURN OVER EXISITNG 20 AMP BREAKERS OVER TO OWNER.

1 / E100 ELECTRICAL SITE PLAN 1"=20'


Kimball
L. Robert Kimball & Associates
Architects and Engineers, Inc.
615 West Highland Ave.
Ebensburg, PA 15931
phone (814) 472-7700
fax (814) 472-7712
email ebldgs@lrkimball.com
web site www.lrkimball.com


CONSULTANTS

PROFESSIONAL

PROJECT NAME:

WESTMORELAND COUNTY COMMUNITY COLLEGE CLASS A BURN BUILDING

OWNER:
WESTMORELAND COUNTY COMMUNITY COLLEGE
YOUNGWOOD, PA 15697

KEYPLAN

| MARK | DATE | DESCRIPTION |
|---|---|---|

| | |
|---|---|
| ISSUE: | 05 / 02 / 07 |
| PROJECT NO: | 07- 2200 - 0175 |
| CAD DWG FILE: | E100.DWG |
| DRAWN BY: | BJS |
| CHECKED BY: | BJB |

© L. Robert Kimball & Associates Architects and Engineers, Inc.

SHEET TITLE

ELECTRICAL DRAWING LEGEND AND SPECIFICATIONS

E1.00

H:\PROJ\07-0175\ME\ELEC\ADD\PLOT\E100.dwg
May 02, 2007 - 9:50am

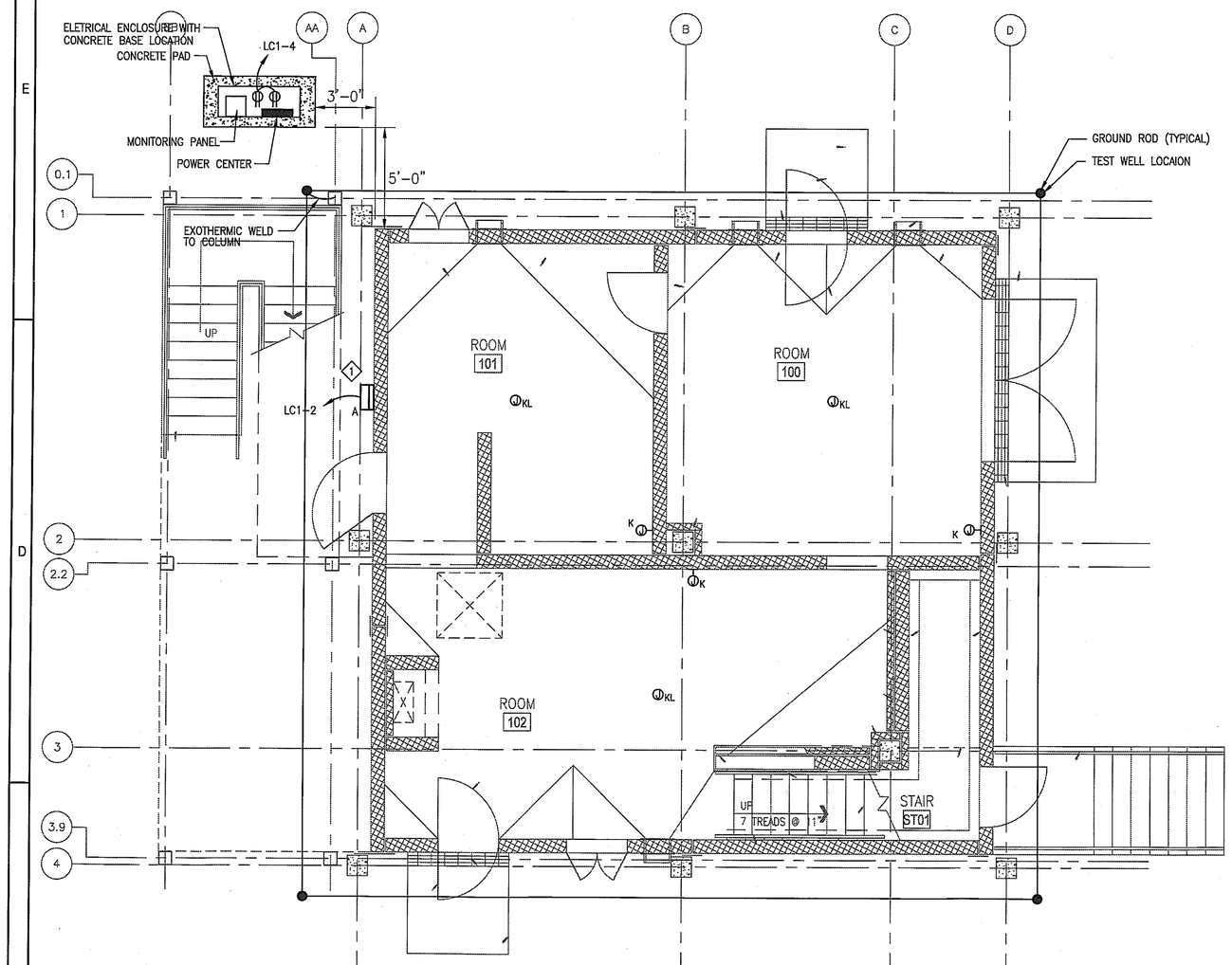


1 E100 ELECTRICAL GROUNDING PLAN

1/4"=1'-0"

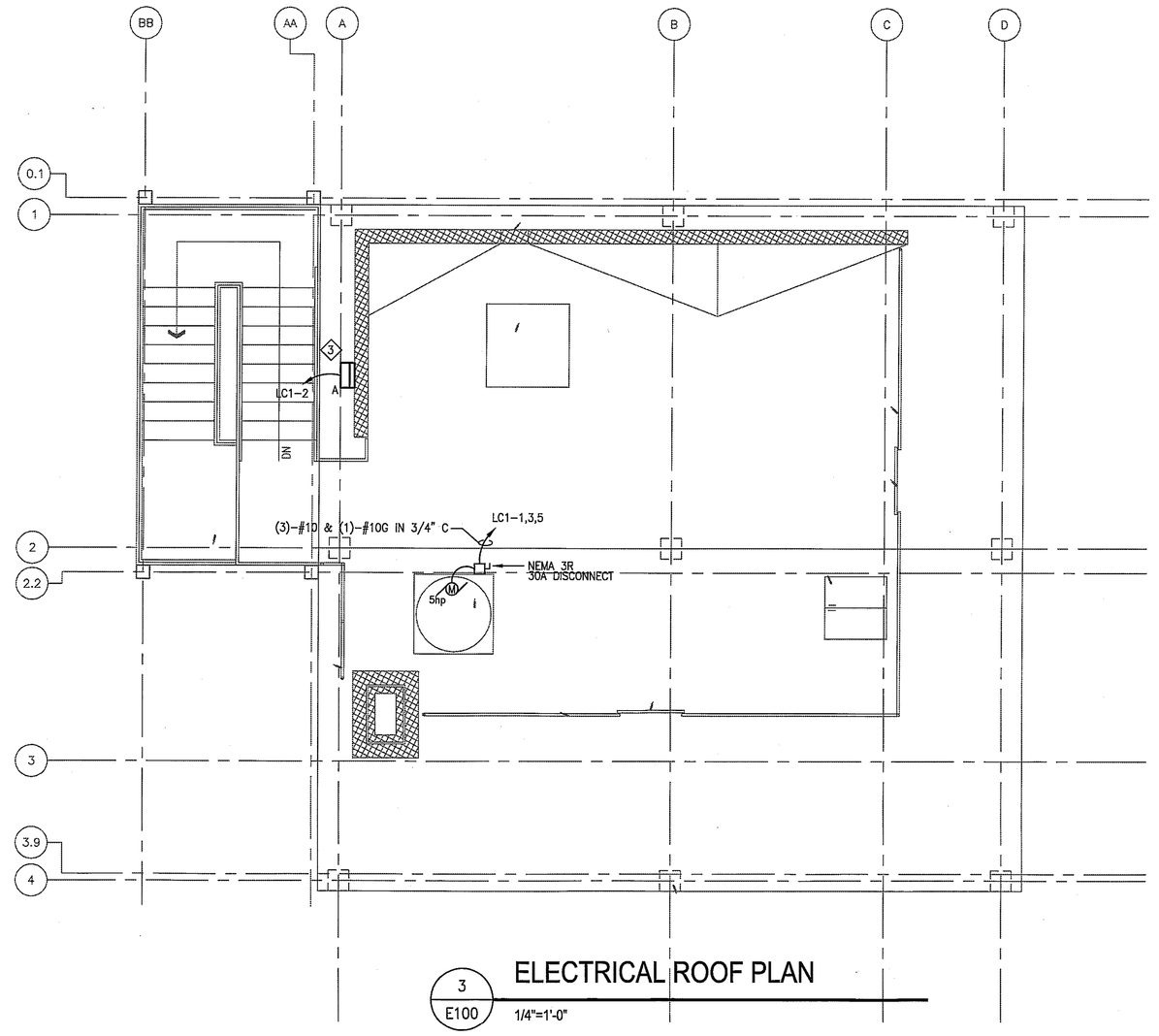


3 E100 ELECTRICAL ROOF PLAN

1/4"=1'-0"

KEYED NOTES:

1. MOUNT TYPE 'A' FIXTURE AT 7'-8" ABOVE TOP OF FIRST FLOOR SLAB.
2. MOUNT BOTH TYPE 'A' FIXTURES AT 17'-0" ABOVE TOP OF FIRST FLOOR SLAB. CIRCUIT TO FIXTURE BELOW.
3. MOUNT TYPE 'A' FIXTURE AT 23'-0" ABOVE TOP OF FIRST FLOOR SLAB. CIRCUIT TO FIXTURES BELOW.

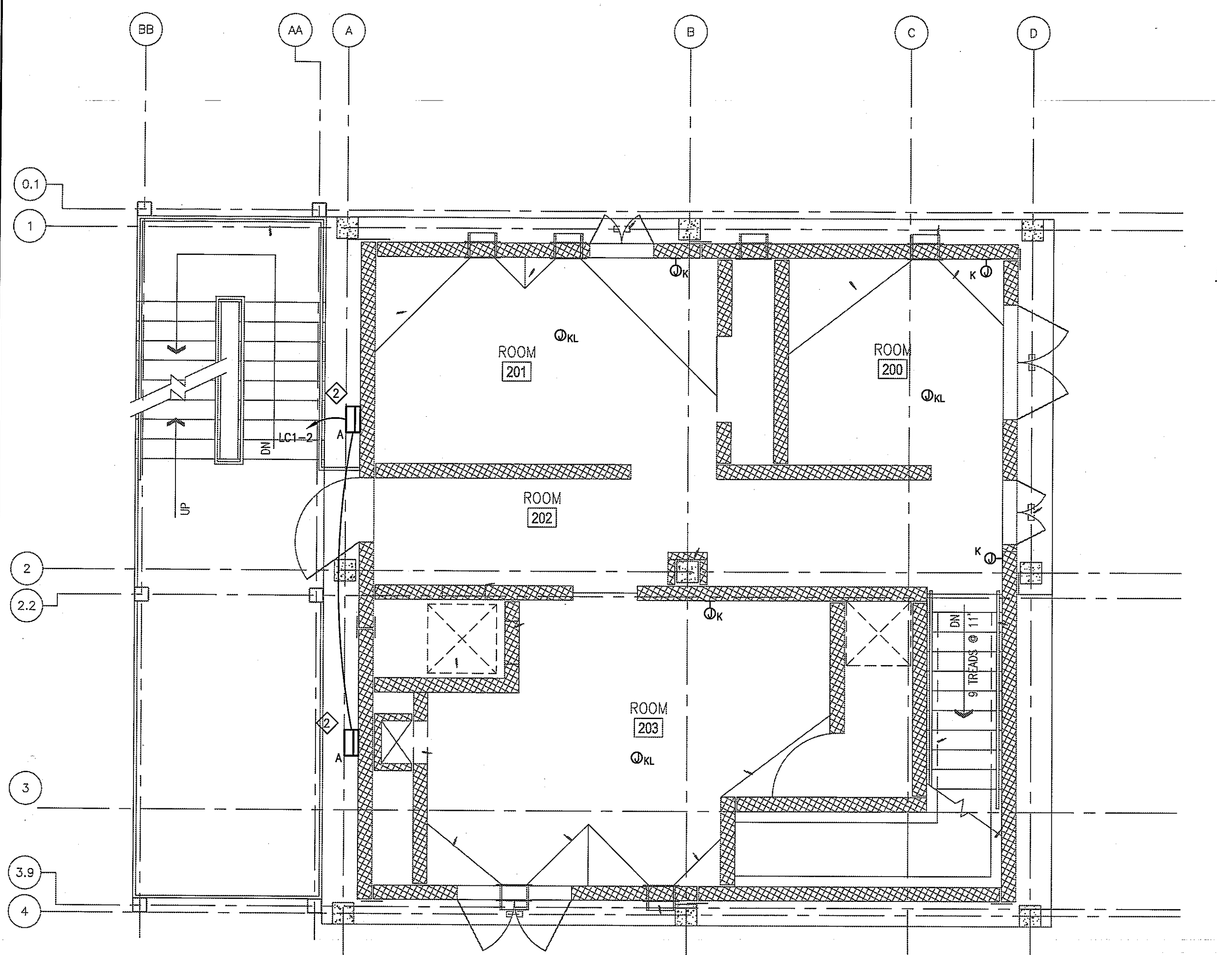


2 E100 ELECTRICAL 2ND LEVEL PLAN

1/4"=1'-0"

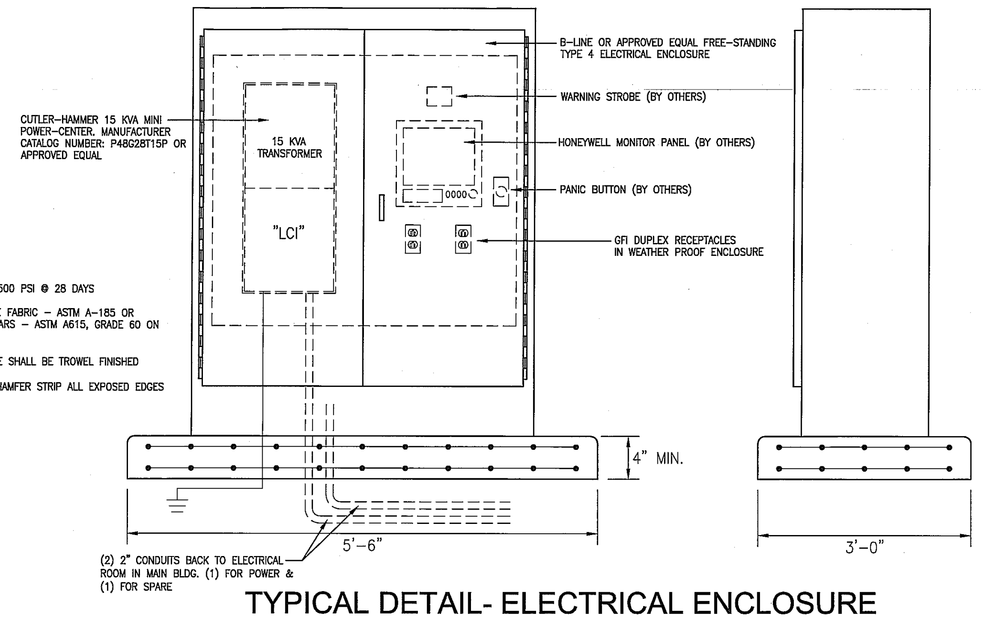


NOTES:

1. CONCRETE 3500 PSI @ 28 DAYS
2. WELDED WIRE FABRIC – ASTM A-185 OR DEFORMED BARS – ASTM A615, GRADE 60 ON 6" CENTERS
3. TOP SURFACE SHALL BE TROWEL FINISHED
4. 3/4 INCH CHAMFER STRIP ALL EXPOSED EDGES

TYPICAL DETAIL- ELECTRICAL ENCLOSURE

N.T.S.

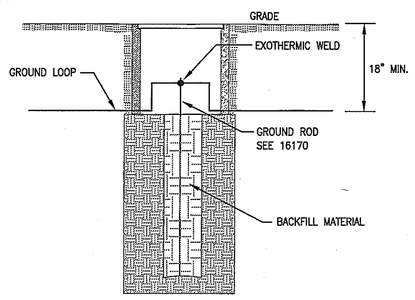


TYPICAL DETAIL- TEST WELL

N.T.S.

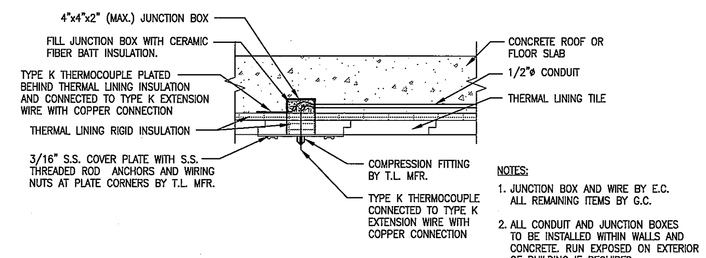


NOTES:

1. JUNCTION BOX AND WIRE BY E.C. ALL REMAINING ITEMS BY G.C.
2. ALL CONDUIT AND JUNCTION BOXES TO BE INSTALLED WITHIN WALLS AND CONCRETE. RUN EXPOSED ON EXTERIOR OF BUILDING IF REQUIRED.

TYPICAL DETAIL- TYPE KL CEILING MOUNTED THERMOCOUPLES

N.T.S.

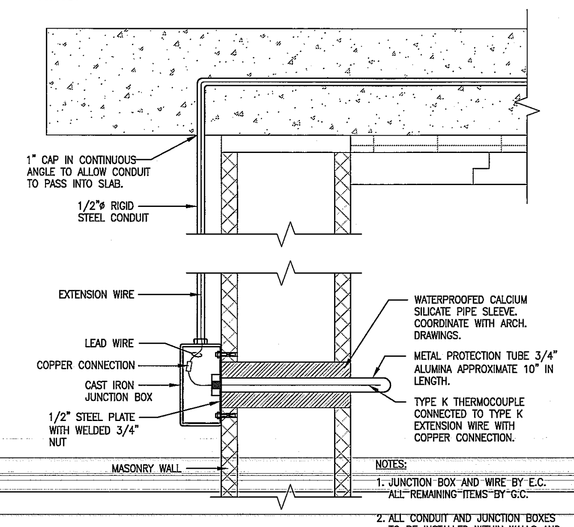


NOTES:

1. JUNCTION BOX AND WIRE BY E.C. "ALL" REMAINING "ITEMS" BY G.C.
2. ALL CONDUIT AND JUNCTION BOXES TO BE INSTALLED WITHIN WALLS AND CONCRETE. RUN EXPOSED ON EXTERIOR OF BUILDING IF REQUIRED.

TYPICAL DETAIL- TYPE K WALL MOUNTED THERMOCOUPLES

N.T.S.


Kimball

L. Robert Kimball & Associates
Architects and Engineers, Inc.

615 West Highland Ave.
Ebensburg, PA 15931

phone (814) 472-7700
fax (814) 472-7712
email aebldgs@lrkimball.com
web site www.lrkimball.com


CONSULTANTS

PROFESSIONAL

PROJECT NAME:

WESTMORELAND COUNTY COMMUNITY COLLEGE CLASS A BURN BUILDING

OWNER:

WESTMORELAND COUNTY COMMUNITY COLLEGE

YOUNGWOOD, PA 15697

KEYPLAN

| MARK | DATE | DESCRIPTION |
|---|---|---|

| | |
|---|---|
| ISSUE: | 05 / 02 / 07 |
| PROJECT NO: | 07- 2200 - 0175 |
| CAD DWG FILE: | E200.DWG |
| DRAWN BY: | BJS |
| CHECKED BY: | BJB |

© L. Robert Kimball & Associates Architects and Engineers, Inc.

SHEET TITLE

ELECTRICAL PLANS

E2.00

H:\PROJ\07-0175\ME\ELEC\ADD\P_01\E200.dwg
May 02, 2007 - 9:46am